SCDOT Technical Proposal

I-20 over Wateree River Bridge Replacement and Swamp Overflow Bridge Rehabilitations

Kershaw County, SC

Design-Build Project

Contract ID 2847360

February 9, 2023

CROWDER 75 YEARS 1947 2022

100 years RK&K

4.1 - Technical Proposal

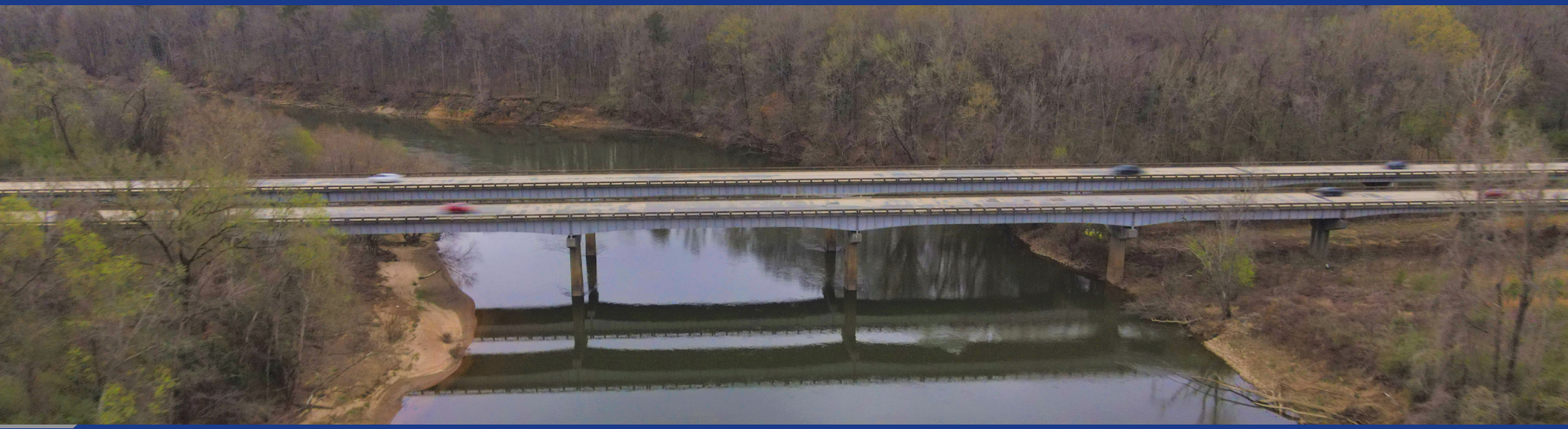

4.1.1 Project Delivery and Approach

4.1.1.a Proposed Schedule for Implementing the Project | The Crowder-RK&K Team recognizes the critical importance and time sensitivity of replacing the I-20 bridges over the Wateree River and rehabilitating the adjacent overflow bridges. Ongoing and increasing maintenance issues, including short-term repair solutions, with these substructures and superstructures have accelerated the need for this project. We have established an aggressive, yet realistic schedule that addresses these challenges. Through the use of FATC 11, our approach enhances the concept designs, safely expedites construction, and reduces project costs, schedule, and long-term maintenance costs. With innovative design and proven construction methods, we are confident that our proposed schedule meets SCDOT's expectations by self-performing critical path activities, leveraging local resources, and minimizing traffic disruptions to deliver an optimized, quality product. *A brief summary of our proposed schedule is illustrated here and detailed in* ***Appendix A.4-CPM Schedule***.

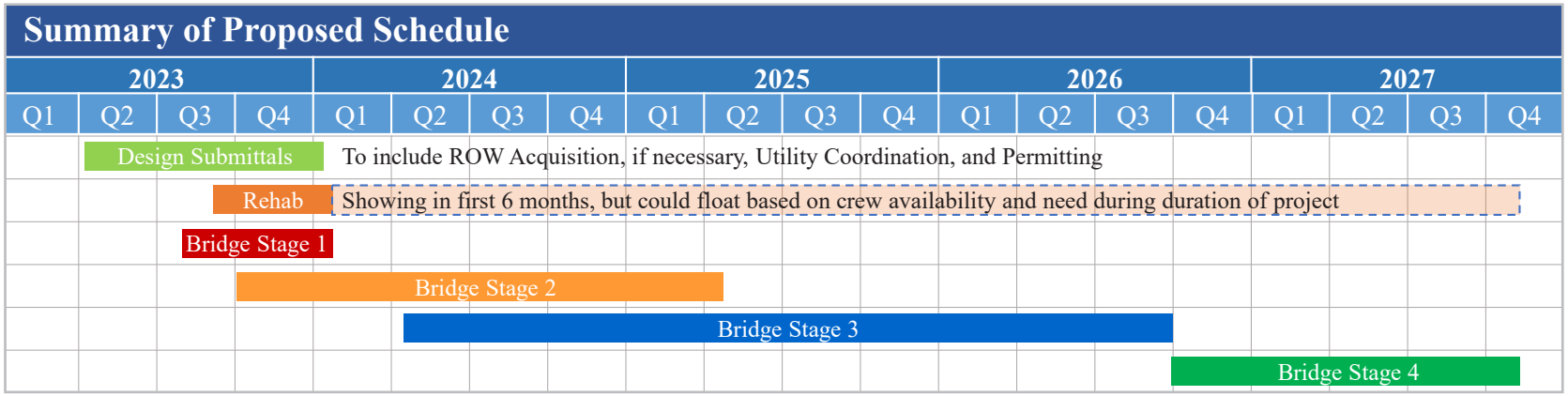

■ **Sequence of Construction** | Our staging approach begins with the partial demolition and construction of the I-20 WB bridge to the north to accommodate a temporary shift of the I-20 EB traffic through the use of a temporary median pond bridge. This allows the I-20 EB bridge to be removed and replaced on SCDOT conceptual plan alignment, away from traffic, in a single MOT phase. The *sequencing shown on the following page* illustrates this approach. Full details are provided in ***Appendix A.2 - MOT Plans/Documents*** and ***Appendix A.3 - Bridge Plans.*** This sequencing included in FATC 11 provides SCDOT with an additional future third lane. This approach requires only one temporary traffic shift of both the EB and WB lanes, significantly reducing the construction schedule and improving the safety of the traveling public.

Rehabilitation of the overflow bridges will begin shortly after NTP and continue throughout the project schedule, rotating crews as necessary based on type.

The typicals below represent the alignment of bridge staging and MOT phasing.

Bridge Staging	MOT Phasing
1 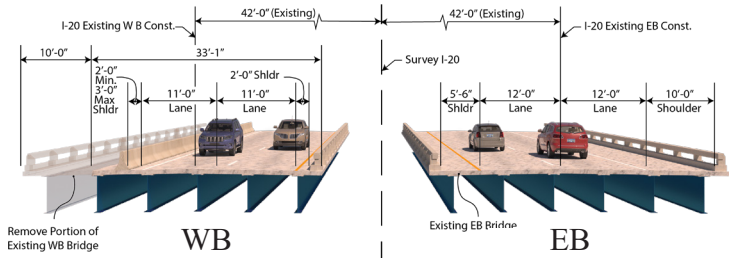	▪ Construct construction access drives ▪ Construct widening of roadway approaches to proposed I-20 WB bridge ▪ Remove the outside portion of the existing I-20 WB bridge ▪ Construct a portion of the proposed I-20 WB bridge ▪ Construct temporary crossovers and temporary pond bridge
2 and **3** 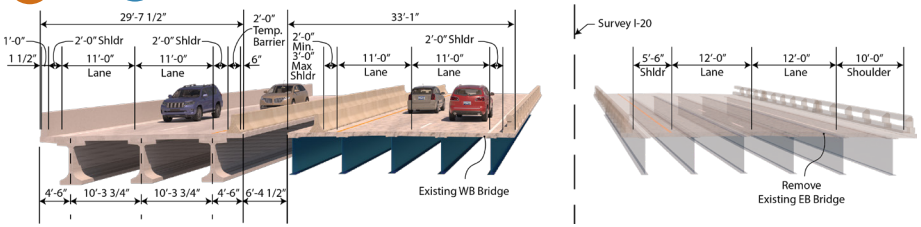	▪ With I-20 EB on the temporary crossover and remainder of existing WB bridge, remove the existing I-20 EB bridge and begin construction of the proposed I-20 EB bridge in its entirety
4 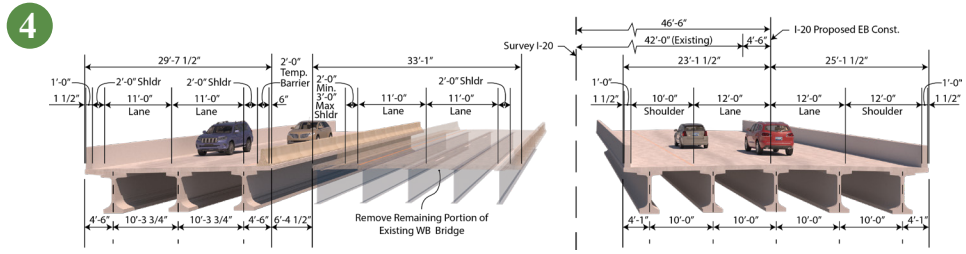	▪ With I-20 EB traffic shifted to the newly completed I-20 EB bridge and I-20 WB traffic remaining on the previously completed portion of the proposed I-20 WB bridge, remove the remaining portion of the existing I-20 WB bridge and construct the remainder of the proposed I-20 WB bridge. ▪ Remove the I-20 EB temporary crossovers and temporary pond bridge.
Completed 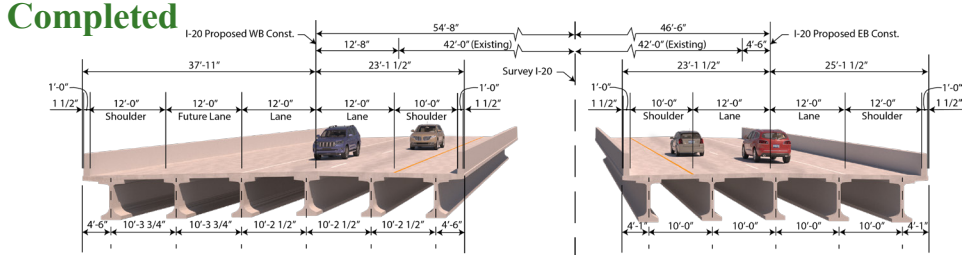	▪ With the I-20 WB bridge complete, and using lanes closures, place the final layer of asphalt where required, install final pavement markings and place I-20 EB and WB into their final patterns.

The renderings to the right visually illustrate the progression of construction.

4.1.1.b Approach to Maintaining Traffic | The Crowder-RK&K Team has developed conceptual Maintenance of Traffic Plans that prioritize safety for the traveling public and construction personnel, minimize travel delays and advance project delivery. This includes constructing as much as possible away from traffic, maintaining consistent traffic patterns, and minimizing construction duration. Safety plays a critical role in the ultimate success of the project and was instrumental in the design decisions for our bridge construction staging and Maintenance of Traffic Plans.

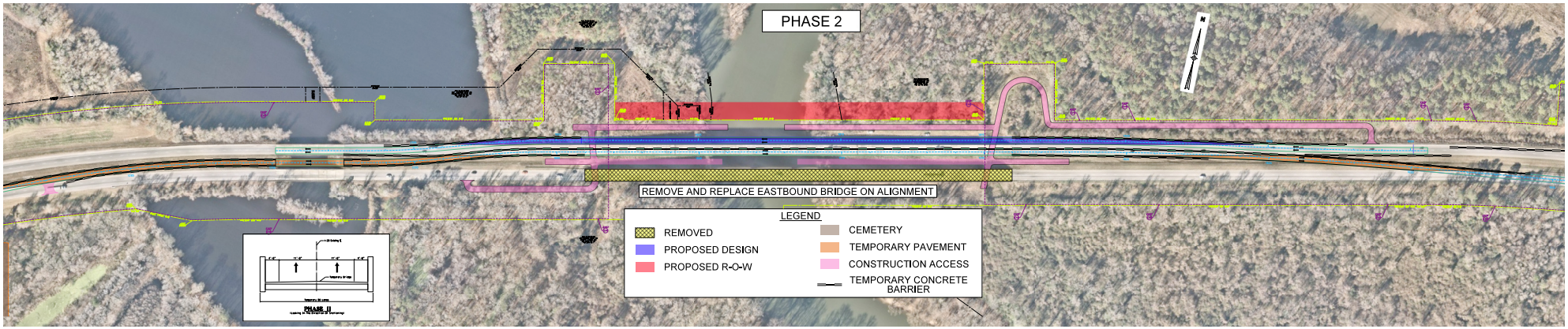

For example, **Phase 1** of FATC 11 constructs as much as possible away from traffic and provides clear separation between the traveling public and the work area while minimizing shoulder closures and travel lane restrictions for I-20 EB. Similarly, in **Phases 2** and **3** we maximize separation between the traveling public and the work area for the I-20 EB bridge removal and replacement. Another benefit of having the bulk of construction away from traffic is the ability to perform a larger percentage during daytime hours and minimizing the need for lane closures. This improves safety by reducing the number of lane closures,

provides better visibility, and improves quality and efficiency, ultimately reducing the overall construction duration for the project and providing a better product for the traveling public and SCDOT. The conceptual Roadway, MOT and Bridge plans detail staging and laydown areas, median access ingress and egress, and bridge construction access for the bridge replacements and rehabilitations. Rehabilitation activities on the adjacent overflow bridges will have more than adequate spacing from the river bridges for temporary lanes shifts/closures and driver decision-making. For additional information on the Approach to Maintaining Traffic, *see Appendix A.2* for roll plots of the Conceptual Maintenance of Traffic Plans.

The Crowder-RK&K Team will develop a comprehensive Transportation Management Plan (TMP) that maximizes safety and mobility while expediting construction operations and schedule. The TMP will consist of three main components: Temporary Traffic Control Plan, Transportation Operations Plan, and Public Information Plan. The Temporary Traffic Control plan will detail traffic control and safety throughout and adjacent to the project. The TMP will be submitted for review and approval by SCDOT before any construction activities begin.

4.1.1.c Proposed Design Submittal Process | A Design Review Submittal Schedule will be included as part of the first submittal package, along with the Design Quality Control Plan (DQCP). Both the Design Review Submittal Schedule and DQCP will be approved prior to submitting any design deliverables. The Design Review Submittal Schedule will also be updated and included with each submittal package. *The graphic on the following page summarizes the sequencing of the Design Review Process*. Please note that submittal packages and durations in this chart are for illustrative purposes only, and include design reviews. *Details of the individual design submittal packages, schedules, and design reviews can be found in* *Appendix A.4-CPM Schedule*. Separate substructure and superstructure bridge plans will be submitted with the final and RFC bridge plan packages as allowed by the RFP. The substructure plans will include final load ratings, connecting elements, and seismic design summary reports. This approach will help minimize and expedite the start of drilled shaft installation. The design review process is integrated into all elements of the design schedule and sequenced for reviews to align approval of design deliverables with the project phasing. Design reviews are especially crucial for approving ROW plans to begin acquisition of the additional ROW detailed in FATC 11. The current schedule to complete the design process is approximately 7 months, with the bridge design as the critical path.

Lessons Learned

Schedule customization is key in accelerated delivery. RK&K has successfully customized the design submittal processes on past projects in order to accelerate delivery. This project requires a breakout of submittals to ensure early delivery. Breaking out substructure and superstructure plans allows us to order materials and begin construction earlier.

Summary of Proposed Design Submittal Chart

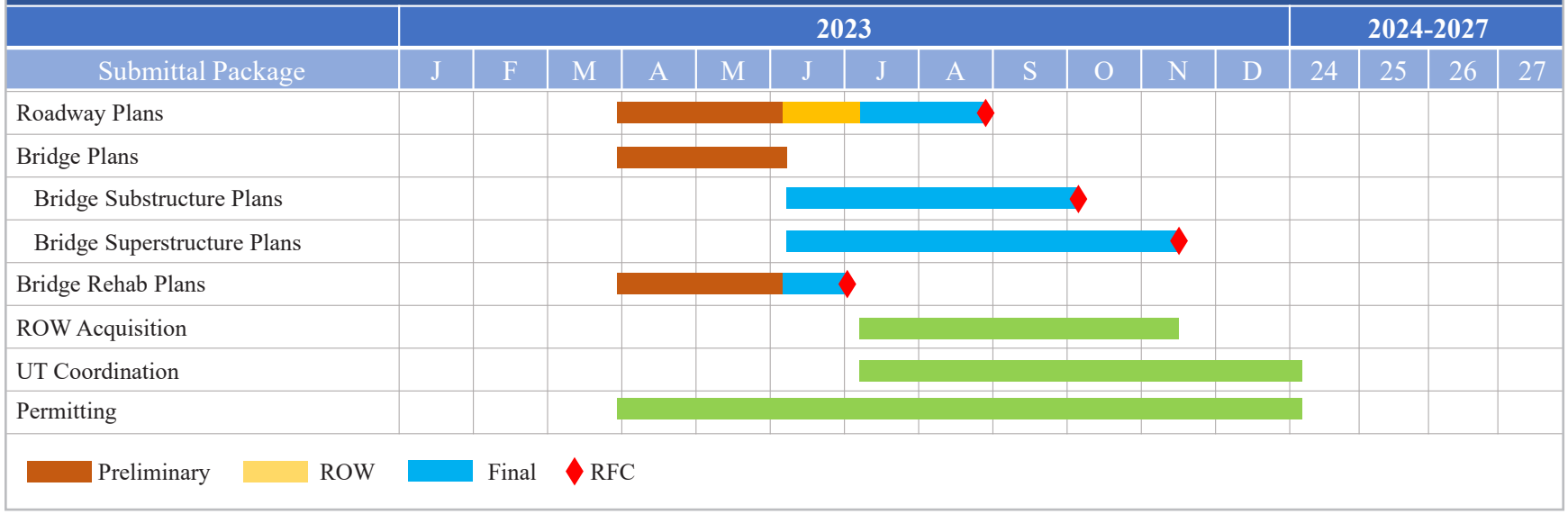

4.1.1.d Approach to Quality Control and understanding of the Quality Assurance Program |

■ **Design QA/QC Process** | The graphic below outlines the major elements and roles of the Design QA/QC approach. It will be detailed in the DQCP.

Quality Assurance (QA)

Ensure compliance with QC process

- Appoint Design QA Manager
- Develop Design QC Plan
- Schedule and budget for Design QC activities
- Conduct QA/QC kick-off meeting
- Verify Design QC compliance with each submittal/revision
- QA/QC documentation available for review

Quality Control Review (QC)

Detailed check of plans / calculations

- Checker: Highlights correct items with YELLOW. Shows corrections/additions in RED
- Backchecker: Reviews comments.
- Updater: Changes and notes corrections with BLUE
- Verifier: Verifies corrections have been completed with GREEN
- Documented via Bluebeam Studio

Discipline Quality Control Review (DQC) *(concurrent with IR)*

High level check of plans for compliance

- Design criteria validation
- Compliance check
- Accuracy/calculations check
- Scope validation check
- Software validation check
- Client preferences validation
- Documented via Bluebeam Studio

Interdisciplinary Review (IR) *(concurrent with DQC)*

Submittal is checked by all disciplines and contractor

- Goal - eliminate plan coordination errors
- Also includes:
  - Subconsultant submittals
  - Constructability reviews
  - Peer reviews - RK&K
- Documented via Bluebeam Studio

SCDOT Design Reviews

SCDOT is the recipient of quality and accurate plans

- SCDOT reviews/approves: Design Review Submittal Schedule and Design Quality Control Plan
- SCDOT submittal review comments provided via Bluebeam Studio
- Verification submittals provided to close SCDOT review comments

■ **Construction Quality Control** | Prior to construction, we will submit a project-specific Construction Quality Management Plan (CQMP) for review and approval, describing Crowder's policies, procedures, staffing plan, and approach to QC. Items addressed in the plan will include procedures for monitoring quality and dealing with failing materials, testing and sampling frequencies/reporting, and a summary of quantities for meeting the minimum acceptance and independent assurance sampling and testing requirements. Documented adherence to the CQMP will be SCDOT's assurance that the materials and work are in compliance with the contract documents. SCDOT-certified inspectors from Wilson.Ferguson Associates will perform the QC testing, under the direction of Crowder's QC Manager.

Lessons Learned

Communication between Quality staff, Contractor crews and Owner Representatives is established through weekly meetings and pre-task coordination review.

Establishing and maintaining healthy working relationships between personnel will ensure effective and efficient resolution of quality concerns if they develop.

■ **Construction Quality Assurance** | SCDOT will be responsible for the project QA including inspections, acceptance testing, independent assurance testing and final project material certification in accordance with SCDOT's Quality Acceptance Sampling and Testing Guide and applicable AASHTO, ASTM, and SC testing methods. Critical to the success of the project is the open and collaborative coordination between Crowder's QC Manager and SCDOT's RCE throughout the project. Clearly understood procedures for addressing and escalating the disposition of non-conforming materials will help ensure prompt resolution and minimal project delays.

■ **Compliance with Required Standards, Testing Laboratories, Mix Designs & Material Certifications Processes** | All QC sampling and testing will be performed in accordance with applicable AASHTO, ASTM, and SC testing methods, and in AASHTO-accredited, SCDOT-approved laboratories by SCDOT-certified personnel. Crowder's CQMP will include mix design submittal processes for review at least five business days prior to use. It will also detail the submission of material certifications, document management procedures, and staff responsible for managing the materials certification program using the Materials Certification Requirements List.

■ **Required Staffing Levels to Meet Requirements** | QC staffing levels will comply with those detailed in the CQMP and be based on the volume of QC activities necessary to adequately control the work. All QC staff will possess the required knowledge, technical skills, certifications, and experience to perform all sampling, testing, and inspection required for CQMP conformance.

4.1.1.e Approach to Addressing Unique Characteristics and Mitigating Risks | The following table describes our Team's proposed approach to addressing unique characteristics of the Project and mitigation of risks.

Risk / Unique Characteristic	Mitigation / Avoidance Strategies
Limitations on in-water and over-water construction and demolition ▪ In-water moratorium permits ▪ Seasonal high water events ▪ Channel migration due to river bend ▪ Securing Section 404 and Navigable Waters permits ▪ Demolition techniques	▪ FATC 11 eliminates the need for a temporary median bridge over the Wateree River. This significantly reduces the amount of in-water and over-water construction and limits it to the construction and demolition of the I-20 EB and WB bridges ▪ FATC 11 also minimizes the need for worksite access through methods such as a temporary overpass ▪ For the I-20 bridges a mixture of work barges, temporary work bridges, cofferdams, and isolation casings will be used to work within the confines of the environmental limitations ▪ Mitigation techniques such as turbidity curtains, TSS (Total Suspended Solids) monitoring, bubble curtains, and slow-tap pile driving techniques will be used to mitigate hydroacoustic concerns ▪ Construction will adhere to all National Marine Fisheries Service (NMFS) guidance and environmental commitments to avoid impacts to sturgeon and avoid further consultation (e.g., use of trestles) ▪ Crowder will coordinate with SCDOT's ESO office weekly during in-water work to confirm compliance with environmental commitments related to sturgeon ▪ Demolition techniques will include the use of turbidity curtains, underwater divers, wire sawing, and underwater debris capture methods
Limited site access ▪ Primary risks - safety and Level of Service for the traveling public ▪ Tight equipment work areas & staging areas	▪ FATC 11 greatly increases site access from the median for both demolition and construction of the I-20 EB and WB bridges ▪ FATC 11 also improves worker and driver safety with the limited number of construction Phases and enhanced site access, and provides larger work areas for equipment and staging ▪ We plan on procuring an offsite staging yard near the project site to ensure adequate material stockpiling

Maintenance of traffic for bridge replacements and rehabilitations
▪ Extended detour durations can lead to unpopular public opinion of the project, greater exposure to traffic risk and risk to traveling public
▪ Unscheduled lanes closures
▪ Close proximity of bridges along I-20
	▪ FATC 11 reduces temporary traffic shifts to only one in each direction, greatly improving driver safety
	▪ FATC 11 provides more than adequate spacing from the river bridges for lanes shifts and driver decision-making when rehabilitation activities are underway.
	▪ A traffic management task force will be used to develop a traffic incident plan with enforcement strategies, including:
	  ▪ Coordination with SCDOT Public Information Office to notify the traveling public of lane closures and traffic shifts
	  ▪ Coordination with emergency services, local school districts, and regional employers on the timing and duration of traffic shifts
	▪ Coordinate with SCDOT RCE on methods such as volumetric mixer for small concrete batches
	▪ Protection/maintenance of existing facilities also impacts MOT:
	  ▪ Provide early coordination with SCDOT on assessments, potential risks, and any signs of impairment
	  ▪ Develop a response plan to address maintenance issues and use of equipment mats to protect pavement

Geotechnical seismic hazards ▪ Moderate seismic activity zone - Seismic Category B ▪ Primary risks - embankment stability, liquefaction settlement, and lateral spreading ▪ Lateral stability of deep foundations impacted by liquefaction - provided shear wave velocity indicates B-C boundary at 75 feet	▪ Perform geotechnical seismic hazard study for the bridge, approach embankments, and roadway structures ▪ Given the bridges are classified as Operational Classification I, we will evaluate using both the Safety Evaluation Earthquake (SEE) and Functional Evaluation Earthquake (FEE) ▪ Seismic hazard mitigation strategies for approach embankments include geosynthetic reinforcement and earthquake drains ▪ Structural mitigation will be investigated to avoid excessive improvements ▪ Soil resistance in liquefiable soil layers will be discounted in deep foundations at interior bents
Market conditions *Labor:* ▪ Availability of craft labor ▪ Availability of DBE participation *Pricing:* ▪ Changing supplier terms ▪ Material pricing volatility ▪ Supply chain issues affecting availability of material suppliers, fabricator and precast providers *Lead Times:* ▪ Unexpected material and shop labor shortages	*Labor:* ▪ Transition staff from the Four Hole Swamp project as it is completed ▪ Ability to hire and retain craft labor by offering competitive compensation, training, growth opportunities, and a safe environment ensures skilled labor remains consistent and available ▪ Leverage existing DBE relationships built over many years and continue to build on our DBE's skill sets and trades ▪ Provide iterative updates as the project progresses to assist DBEs in appropriately planning their resources. *Pricing:* ▪ Conducted in-depth discussions with material suppliers/subcontractors in developing the estimate to better ensure price stability ▪ Conduct detailed and frequently updated scheduling ▪ Write Purchase Orders as soon as possible to lock in pricing and avoid future increases *Lead Times:* ▪ To address precast long lead times, get piles and girders into production months ahead of need to be onsite ▪ Secure delivery agreements with multiple haulers for precast elements to ensure delivery schedules ▪ Coordinate multiple purchase orders for ready mix suppliers
Environmental / ROW ▪ Cemetery/Archaeology ▪ Leasing of ROW	▪ A revised cultural study must be performed to evaluate the new ROW to the north of the I-20 WB bridge alignment. This study may result in locating unmarked or marked cemetery sites and other archaeological finds thereby adding a schedule delay. We have mitigated this risk as demonstrated by our early completion date in the schedule ▪ Additional ROW will need to be leased from adjacent property owners for the purpose of access/egress to shoulder work zones. Negotiations with these property owners could result in schedule delays. We have mitigated this issue through early (pre-bid) contact established with each property owner

4.1.2 Innovation and Added Value

The Innovation and Added Value provided by the Crowder-RK&K Team delivers clear and quantifiable benefits to both SCDOT and the traveling public. Each of these items are non-conditional commitments beyond the requirements of the RFP and/or are provided by our innovative solutions. *These benefits are summarized on the following pages and further detailed in the* ***Quality Credit Matrix in Appendix B***.

Innovation and Added Value

		Added Value			
		Schedule	Cost	Maintenance	Safety
4.1.2.a Expedited Schedule					
N/A	▪ The Crowder-RK&K Team is committed to meeting the RFP schedule.				
4.1.2.b Schedule Certainty					
FATC 11	▪ FATC 11 minimizes MOT staged and phased bridge construction, which minimizes critical path activities ▪ Minimizing critical path activities provides greater flexibility for crew scheduling, allowing worker consistency and efficiency	✓			
4.1.2.c Minimizing Impacts to Traffic					
FATC 11	▪ FATC 11 reduces temporary traffic shifts to one shift in each direction of travel ▪ Provides enhanced separation between the traveling public and the work area ▪ Allows for more consistent traffic patterns during construction, including the existing pattern on I-20 EB, for an extended period of time ▪ Maximizes daytime work which improves safety, quality, and efficiency ▪ Reduces the number of required lanes closures ▪ Provides a better project experience for traveling public	✓	✓	✓	✓
FATC 5 - 4% Superelevation	▪ Minimizes the length of superelevation transitions and minimizes the temporary pavement elevation changes required between existing and temporary alignments ▪ Minimizes the length of superelevation transitions and minimizes the temporary pavement elevation changes required between temporary and final alignments ▪ Minimizes amount of pavement reconstruction for temporary alignment construction and removal, thereby reducing impacts to traffic (smaller work zones and shorter construction durations)	✓	✓		✓
Temp. median pond bridge	▪ Through the use of a temporary median pond bridge, the west end median crossover design speed meets all RFP criteria. Use of a temporary pond bridge with FATC 5 places most temporary pavement off-line from existing travel lanes and minimizes temporary pavement in existing travel lanes ▪ Through the use of a temporary pond bridge, the west median cross crossover design meets RFP criteria except those modified by FATC 5	✓	✓		✓
Alignment criteria	▪ Alignment criteria for the east end median crossover exceeds the minimum RFP criteria, improving driver safety and enhancing the driver experience				✓
Laydown areas	▪ Laydown areas will be on the unused side of the roadway to ensure that materials and equipment do not need to cross I-20 during each construction phase				✓
MOT for Construction Access	▪ MOT concept utilizes the same construction access locations throughout construction. This minimizes construction traffic interaction with traffic. This also provides consistent traffic pattern for motorists which enhances safety				✓

Innovation and Added Value

4.1.2.d Construction Techniques that Limit In-Water Construction

		Added Value			
		Schedule	Cost	Maintenance	Safety
Overwater Work	▪ All overwater work will be built using temporary work bridges or barges				✓
Divers	▪ Use of skilled construction Divers to run wire saw chains and install rigging/lifting points	✓			✓
Drilled Shaft Foundations	▪ Drilled shaft foundations will be used within the waterway to ensure the least possible in-water impact	✓			
Turbidity Curtains	▪ At a minimum, turbidity curtains will be used during the removal of existing Piers F & G for both existing structures	✓			
Specialized Equipment	▪ Equipment and saw cutting efforts will be optimized to ensure the largest pieces possible can be removed to reduce in-water work	✓			

4.1.2.e Materials, Designs, & Methods that Minimize Maintenance Costs and Benefits

Future third travel lane	▪ FATC 11 includes a future third travel lane for the WB bridge, reducing future widening costs and schedule, impacts to traffic, and in-water construction ▪ Until future widening of the approach roadways, FATC 11 enhances the safety of bridge maintenance activities as the additional future lane width provides additional lateral space between maintenance activities and traffic		✓	✓	✓
Prestressed Concrete Girders	▪ Concrete bridge girders have a longer life cycle than steel girders, require less maintenance and do not require painting		✓	✓	
FATC 8	▪ FATC 8 allows our bridge to be only 10 feet longer than the existing bridge, saving 10 feet of length for both Wateree River bridges. (1085 SF less bridge deck area to maintain)	✓	✓	✓	
Integral End Bents	▪ Our Team is proposing integral end bents, minimizing joint and bearing maintenance costs over the life cycle of the structures			✓	

Appendix A
Conceptual Plans

A.1 - Roadway Plans

SHEET NO.	TOTAL SHEETS
1	12

INDEX OF SHEETS

SHEET NO.	DESCRIPTION	SHEET SUBTOTALS
1	TITLE SHEET	1
2	TYPICAL SECTIONS	1
6 - 10A	PLAN AND PROFILE SHEETS	10
	TOTAL SHEETS =	12

SCDOT

South Carolina Department of Transportation

CONCEPTUAL ROADWAY PLANS FOR

KERSHAW COUNTY

CONTRACT ID 2847360

I-20

DUAL BRIDGE REPLACEMENT OVER WATEREE RIVER

Hydraulic Design Reference for these plans is the:

2009

Edition of SCDOT's "Requirements for Hydraulic Design Studies"

Design Reference for these plans is the:

2018

AASHTO "A Policy on Geometric Design of Highways and Streets"

NPDES PERMIT INFORMATION

Disturbed Area = 5.5 Acre(s)

Project Area = 7.7 Acre(s)

Approximate Location of Roadway is

Begin

Latitude 34°12'60"N

Longitude 80°38'05"W

End

Latitude 34°13'09"N

Longitude 80°37'14"W

Hydraulic and NPDES Design provided by:

RK&K

Designs may be obtained from the SCDOT Regional Production Group

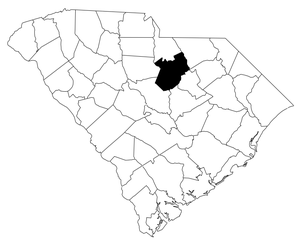

MAP SHOWING LOCATION OF KERSHAW COUNTY IN SOUTH CAROLINA

CONTRACT ID 2847360
CONSTRUCTION LIMITS I-20
CL STA. 1775+97.50 TO STA. 1801+00.00
SEE SHEET 6-10A

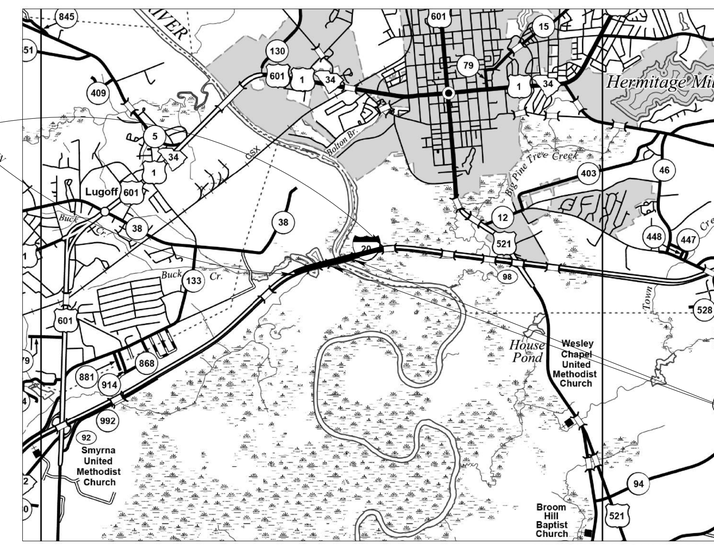

KERSHAW COUNTY MAP

BRIDGE LIMITS
I20WBR
CONSTRUCT 1,514.50' X 60.25' CONCRETE BRIDGE
STA. 1800+93.24 TO STA. 1816+07.74
I20EBR
CONSTUCT 1,514.50' X 48.25' CONCRETE BRIDGE
STA. 1800+93.11 TO STA. 1816+07.61
*NOTE: BRIDGE PLANS BOUND UNDER SEPARATE COVER

LAYOUT

SCALE = N.T.S.

	I20WBR	I20EBR	TOTAL	
NET LENGTH OF ROADWAY	0.330	0.327	0.657	MILES
NET LENGTH OF BRIDGES	0.286	0.286	0.572	MILES
NET LENGTH OF PROJECT	0.832	0.820	1.652	MILES
LENGTH OF EXCEPTIONS	0.000	0.000	0.000	MILES
GROSS LENGTH OF PROJECT	0.832	0.820	1.652	MILES

EQUALITIES IN STATIONING

NONE

NOTE: EXCEPT AS MAY OTHERWISE BE SPECIFIED ON THE PLANS OR IN THE SPECIAL PROVISIONS, ALL MATERIALS AND WORKMANSHIP ON THIS PROJECT SHALL CONFORM TO THE SOUTH CAROLINA DEPARTMENT OF TRANSPORTATION STANDARD SPECIFICATIONS FOR HIGHWAY CONSTRUCTION (2007 EDITION) AND THE STANDARD DRAWINGS FOR ROAD CONSTRUCTION IN EFFECT AT THE TIME OF FINAL RFP.

3 DAYS BEFORE DIGGING IN SOUTH CAROLINA

CALL 811

SOUTH CAROLINA 811 (SC811)
WWW.SC811.COM
ALL UTILITIES MAY NOT BE A MEMBER OF SC811

RAILROAD INVOLVEMENT?
YES / NO

TRAFFIC DATA

2025 ADT 42,754

2045 ADT 57,583

TRUCKS 21 * %

*PER CONCEPTUAL BRIDGE PLANS

75 YEARS 1947 2022 CROWDER

100 years RK&K

zwilson
:\SC\SCDOT\P2001-009_I-20 Bridge over Wateree DB\Preliminary Design\Roadway\r29450ts.dgn
2/8/2023

std_form13.dgn

FED. ROAD DIV. NO.	STATE	COUNTY	PROJECT ID	ROUTE NO.	SHEET NO.
3	S.C.	KERSHAW	P029450	I-20	2

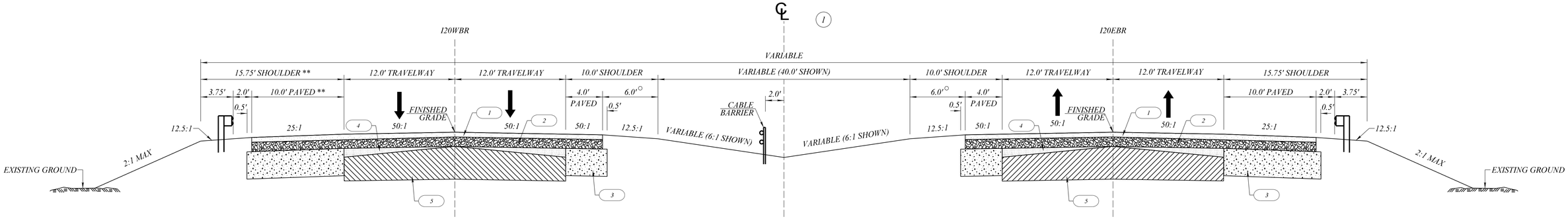

USE THIS SECTION ON:

I20WBR FROM STA. 1792+55.00 TO STA. 1800+93.24 (BEGIN BRIDGE)
I20WBR FROM STA. 1819+31.92 TO STA. 1825+10.00
I20EBR FROM STA. 1793+20.00 TO 1800+93.11 (BEGIN BRIDGE)
I20EBR FROM STA. 1818+78.33 TO 1825+60.00

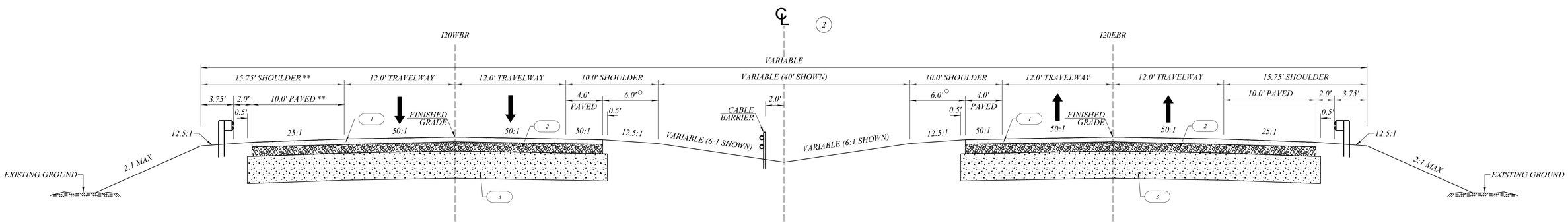

USE THIS SECTION ON:

I20WBR FROM STA. 1816+07.74 (END BRIDGE) TO STA. 1819+31.92
I20EBR FROM STA. 1816+07.61(END BRIDGE) TO STA. 1818+78.33

○ *NOTE:*
ADDITIONAL 3.75' WHERE MGS3 GUARDRAIL IS USED

** *NOTE:*
210.00' TAPER USED TO MATCH PROPOSED 24' BRIDGE SHOULDER:
I20WBR STA. 1798+25.00 TO STA. 1800+35.00 AND
I20WBR STA. 1816+65.00 TO STA. 1818+75.00

LEGEND

1	HOT MIX ASPHALT SURFACE COURSE TYPE A (200 LBS/SY)
2	HOT MIX ASPHALT INTERMEDIATE COURSE TYPE B (400 LB/SY)
3	HOT MIX ASPHALT BASE COURSE TYPE A (1150 LBS/SY)
4	HOT MIX ASPHALT SURFACE COURSE TYPE E FOR BUILDUP AND LEVELING 0" TO 1.8"**
	** HOT MIX ASPHALT INTERMEDIATE TYPE B FOR BUILDUP AND LEVELING FOR GREATER THICKNESSES
5	EXISTING PAVEMENT - RETAIN

FUNCTIONAL CLASS	DESIGN SPEED		
	MPH	FROM STA.	TO STA.
RURAL FREEWAY (I20WBR)	75	1792+55.00	1825+10.00
RURAL FREEWAY (I20EBR)	75	1793+20.00	1825+60.00

SOUTH CAROLINA
RUMMEL KLEPPER & KAHL LLP
No. 334
CERTIFICATE OF AUTHORIZATION

CONTRACTOR:
75 YEARS 1947 2022 CROWDER

PREPARED BY:
100 years RK&K

SCDOT
CONCEPTUAL PLANS

TYPICAL SECTION SHEET

SCALE 1"V= NTS SCALE 1"H= NTS

zwilson
2/8/2023
22\SC\SCDOT\P2001-009_I-20 Bridge over Wateree DB\Preliminary Design\Roadway\r29450typ.dgn

scTypUdgn

FED. RD. DIV. NO.	STATE	COUNTY	PROJECT ID	ROUTE NO.	SHEET NO.
3	S.C.	KERSHAW	P029450	I-20	6

DUAL BRIDGES OVER WATEREE RIVER

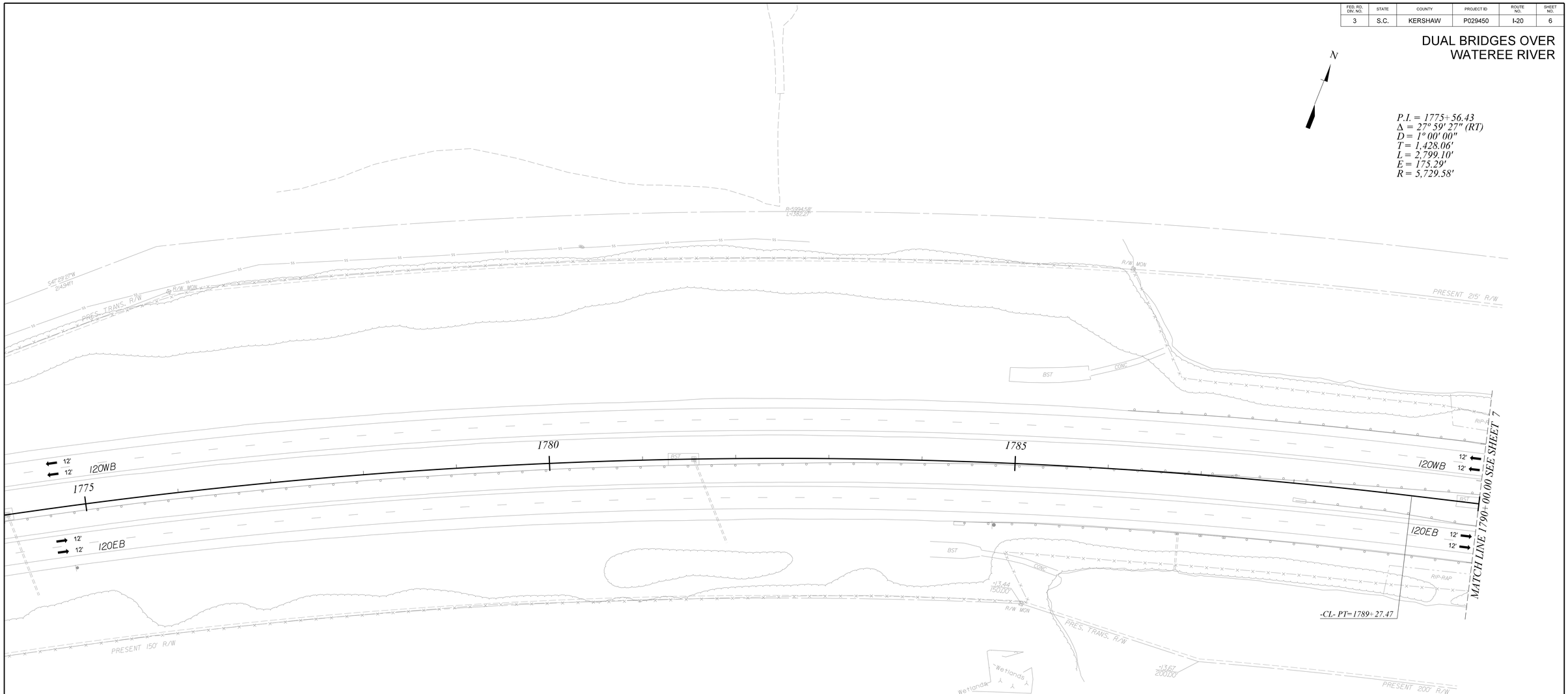

GENERAL NOTES

* RELEVANT STANDARD DRAWINGS: 719-920-00, 805-115-10, 805-115-11, 805-170-00, 805-210-00, 805-325-10, 805-325-30, 805-325-70, 805-325-75, 805-325-76, 805-525-01, 805-905-01, 805-905-02, 805-905-03, 805-910-00, 805-935-00, AND 805-950-01
* NOTE: PRE-MASH GUARRAIL AND END TREATMENTS REPLACED ON POND AND REHAB BRIDGES PER RFP AS NECESSARY.RELEVANT PRE-MASH STANDARD DRAWINGS: 805-605-11, 805-635-00, 805-645-00, 805-690-30
* NOTE: IN CASES WHERE PREMASH GUARDRAIL TERMINATES BEHIND AREAS PROTECTED BY A MASH GUARDRAIL SYSTEM, W-BEAM TYPE B TRAILING END TREAMENTS ARE CONSTRUCTED.
* NO NEW R/W ANTICIPATED UNLESS REQUIRED FOR FUTURE MAINTENANCE
* MATERIAL STAGING AND LAYDOWN AREA MAY VARY IN FIELD BY CONTRACTOR UPON AWARD. EXISTING ROAD BED TO BE USED WHEN EXISTING STRUCTURE IS CLOSED FOR DEMOLITION.NO ADDITIONAL CLEARING AND GRUBBING WILL BE NECESSARY

SOUTH CAROLINA
RUMMEL, KLEPPER & KAHL LLP
No. 334
CERTIFICATE OF AUTHORIZATION

CONTRACTOR:
75 YEARS 1947 2022 CROWDER

PREPARED BY:
100 years RK&K

DO NOT USE FOR CONSTRUCTION

SCDOT
CONCEPTUAL PLANS

PLAN SHEET

SCALE 1" = 50'

\\ad.rkk.com\fs\Cloud\Mktg\Proposals\2022\SC\SCDOT\P2001-009_I-20 Bridge over Wateree DB\Preliminary Design\Roadway\Plan Sheets\r29450pf6.dgn
zwilson
2/8/2023

06_Plan_Profile_Sheet_50

FED. RD. DIV. NO.	STATE	COUNTY	PROJECT ID	ROUTE NO.	SHEET NO.
3	S.C.	KERSHAW	P029450	I-20	6A

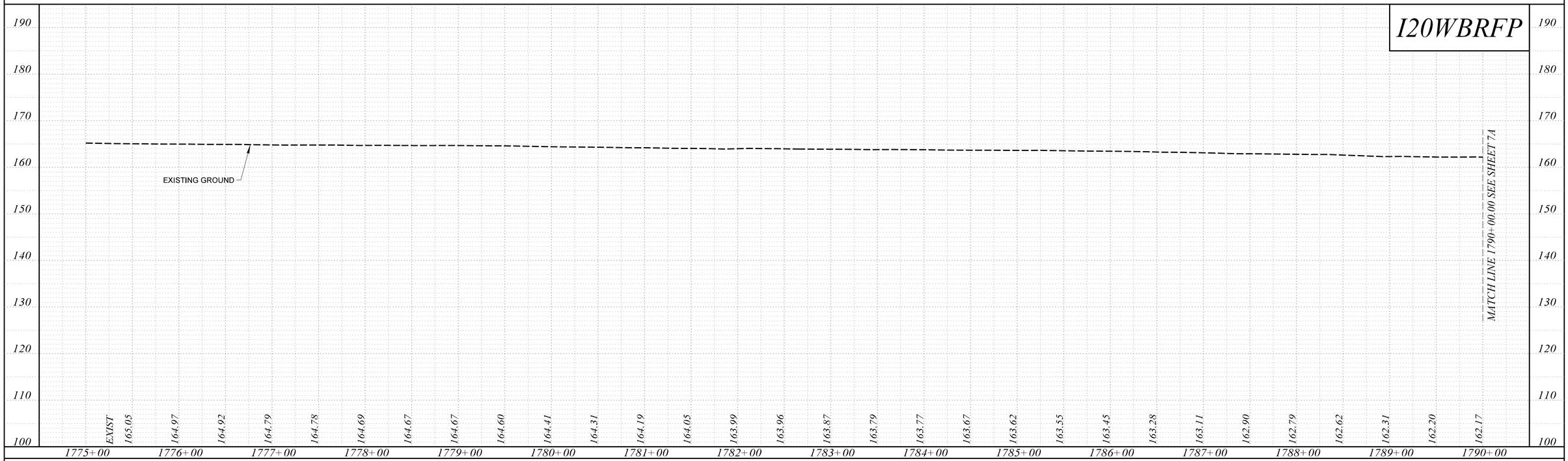

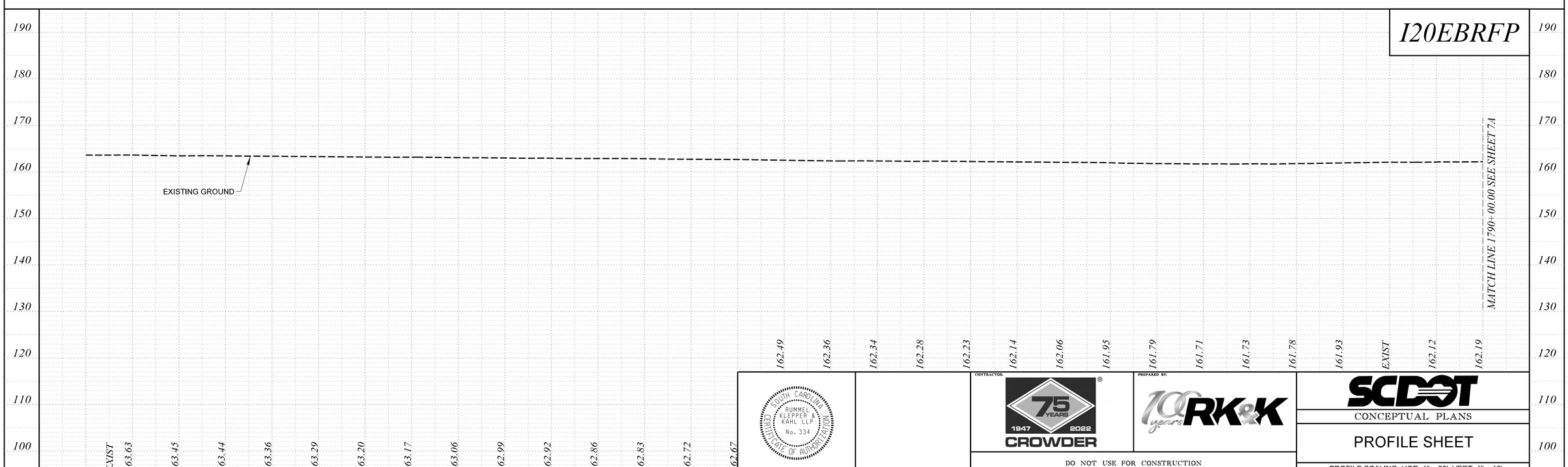

SOUTH CAROLINA
RUMMEL KLEPPER & KAHL LLP
No. 334
CERTIFICATE OF AUTHORIZATION

CONTRACTOR:
CROWDER 75 YEARS 1947 2022

PREPARED BY:
RK&K 100 years

DO NOT USE FOR CONSTRUCTION

SCDOT
CONCEPTUAL PLANS

PROFILE SHEET

PROFILE SCALING: HOR. 1" = 50', VERT. 1" = 10'

\\ad.rkk.com\fs\Cloud\Mktg\Proposals\2022\SC\SCDOT\P2001-009_I-20 Bridge over Wateree DB\Preliminary Design\Roadway\Profile Sheets\r29450_pf6A.dgn
zwilson
2/8/2023

06_Profile_Sheet_20

FED. RD. DIV. NO.	STATE	COUNTY	PROJECT ID	ROUTE NO.	SHEET NO.
3	S.C.	KERSHAW	P029450	I-20	7

DUAL BRIDGES OVER WATEREE RIVER

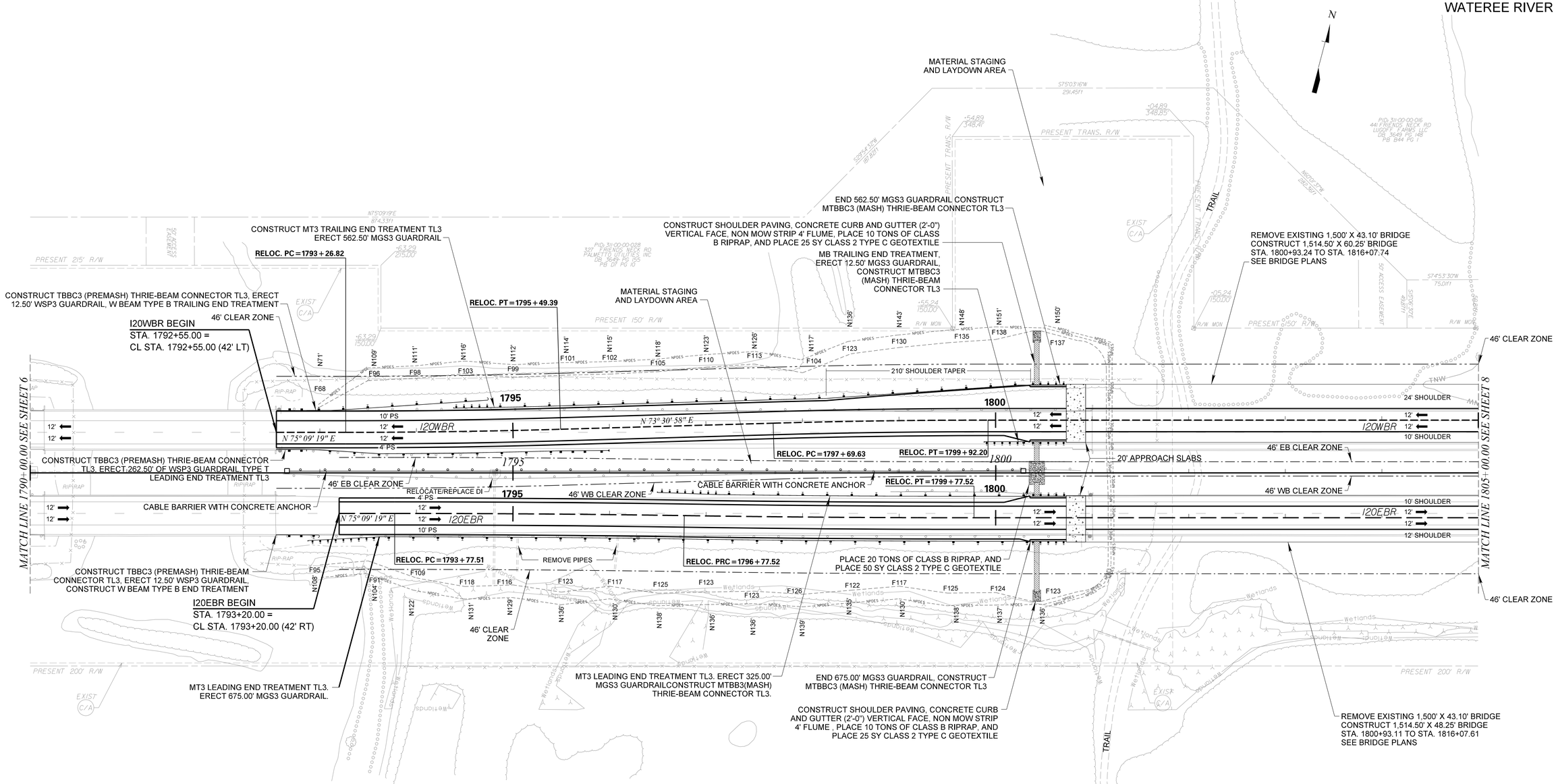

Reloc. Curve Data
ROAD I20WBR1
P.I. = 1794+38.11
Δ = 1° 38' 21" (LT)
D = 0° 44' 11"
T = 111.29'
L = 222.57'
E = 0.80'
R = 7,780.00'
D.S. = 75 MPH
eMAX = 8.0%
e = 3.0%
P.C. - LG% = 0.50
P.T. - LG% = 0.50

Reloc. Curve Data
ROAD I20WBR2
P.I. = 1798+80.92
Δ = 1° 38' 21" (RT)
D = 0° 44' 11"
T = 111.29'
L = 222.57'
E = 0.80'
R = 7,780.00'
D.S. = 75 MPH
eMAX = 8.0%
e = 3.0%
P.C. - LG% = 0.50
P.T. - LG% = 0.50

Reloc. Curve Data
ROAD I20EBR1
P.I. = 1795+27.52
Δ = 0° 51' 34" (RT)
D = 0° 17' 11"
T = 150.00'
L = 300.00'
E = 0.56'
R = 20,000.00'
D.S. = 75 MPH
eMAX = 8.0%
e = NC
P.C. - LG% = N/A
P.T. - LG% = N/A

Reloc. Curve Data
ROAD I20EBR2
P.I. = 1798+27.52
Δ = 0° 51' 34" (LT)
D = 0° 17' 11"
T = 150.00'
L = 300.00'
E = 0.56'
R = 20,000.00'
D.S. = 75 MPH
eMAX = 8.0%
e = NC
P.C. - LG% = N/A
P.T. - LG% = N/A

SOUTH CAROLINA RUMMEL, KLEPPER & KAHL LLP No. 334 CERTIFICATE OF AUTHORIZATION

CONTRACTOR: CROWDER 75 YEARS 1947 2022

PREPARED BY: RK&K 100 years

DO NOT USE FOR CONSTRUCTION

SCDOT
CONCEPTUAL PLANS

PLAN SHEET

SCALE 1" = 50'

\\ad.rkk.com\fs\Cloud\Mktg\Proposals\2022\SC\SCDOT\P2001-009_I-20 Bridge over Wateree DB\Preliminary Design\Roadway\Plan Sheets\r29450pf7.dgn
zwilson
2/8/2023

06_Plan_Profile_Sheet_50

FED. RD. DIV. NO.	STATE	COUNTY	PROJECT ID	ROUTE NO.	SHEET NO.
3	S.C.	KERSHAW	P029450	I-20	7A

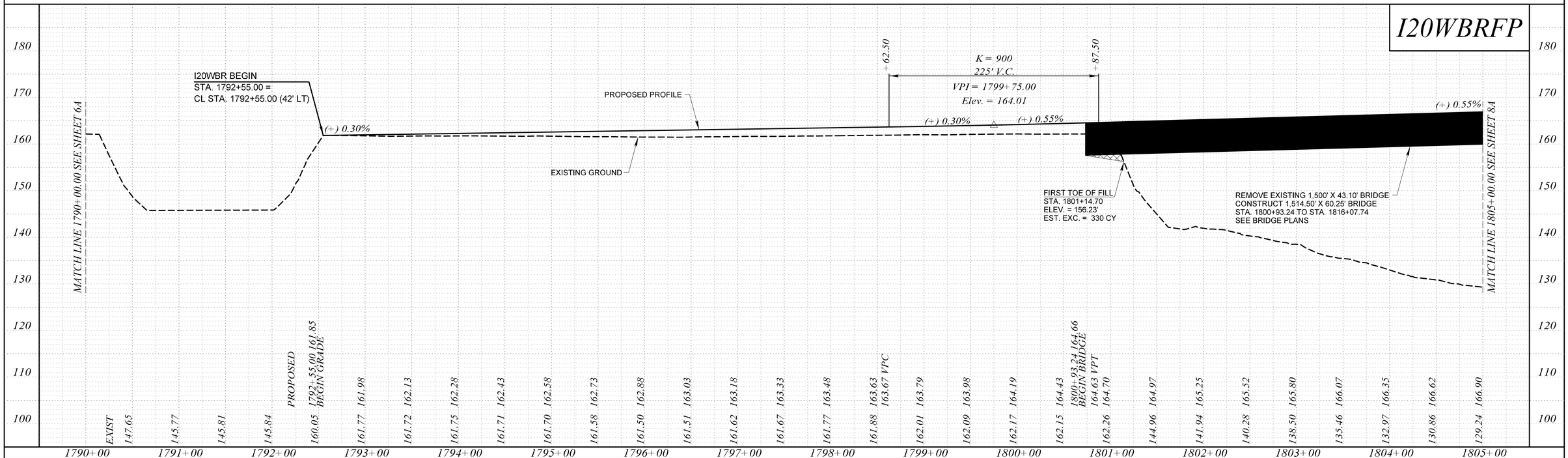

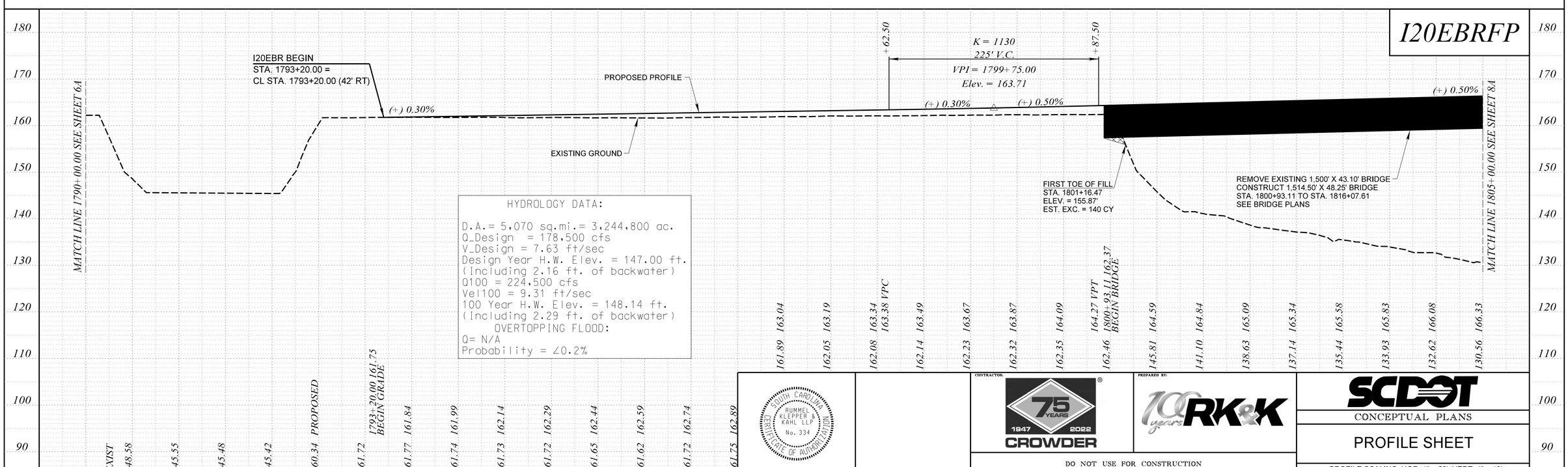

HYDROLOGY DATA:

D.A.= 5,070 sq.mi.= 3,244,800 ac.
Q_Design = 178,500 cfs
V_Design = 7.63 ft/sec
Design Year H.W. Elev. = 147.00 ft.
(Including 2.16 ft. of backwater)
Q100 = 224,500 cfs
Vel100 = 9.31 ft/sec
100 Year H.W. Elev. = 148.14 ft.
(Including 2.29 ft. of backwater)
OVERTOPPING FLOOD:
Q= N/A
Probability = ∠0.2%

SOUTH CAROLINA PROFESSIONAL ENGINEER
RUMMEL KLEPPER & KAHL LLP
No. 334
CERTIFICATE OF AUTHORIZATION

CONTRACTOR: CROWDER 75 YEARS 1947 2022

PREPARED BY: RK&K 100 years

SCDOT
CONCEPTUAL PLANS

PROFILE SHEET

DO NOT USE FOR CONSTRUCTION

PROFILE SCALING: HOR. 1" = 50', VERT. 1" = 10'

\\ad.rkk.com\fs\Cloud\Mktg\Proposals\2022\SC\SCDOT\P2001-009_I-20 Bridge over Wateree DB\Preliminary Design\Roadway\Profile Sheets\r29450_pf7A.dgn
zwilson
2/8/2023

06_Profile_Sheet_20

FED. RD. DIV. NO.	STATE	COUNTY	PROJECT ID	ROUTE NO.	SHEET NO.
3	S.C.	KERSHAW	P029450	I-20	8

DUAL BRIDGES OVER WATEREE RIVER

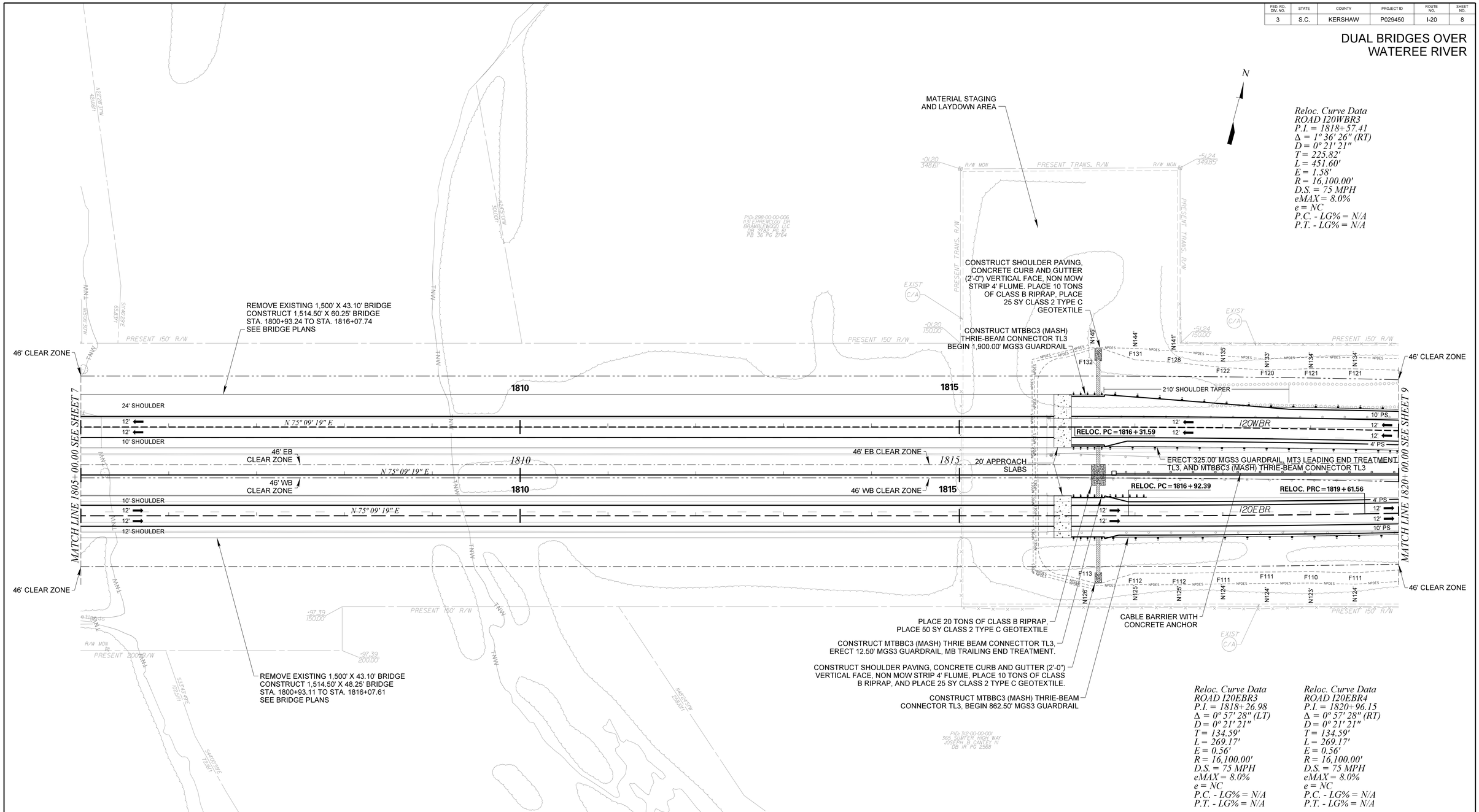

Reloc. Curve Data
ROAD I20WBR3
P.I. = 1818+57.41
Δ = 1° 36' 26" (RT)
D = 0° 21' 21"
T = 225.82'
L = 451.60'
E = 1.58'
R = 16,100.00'
D.S. = 75 MPH
eMAX = 8.0%
e = NC
P.C. - LG% = N/A
P.T. - LG% = N/A

Reloc. Curve Data
ROAD I20EBR3
P.I. = 1818+26.98
Δ = 0° 57' 28" (LT)
D = 0° 21' 21"
T = 134.59'
L = 269.17'
E = 0.56'
R = 16,100.00'
D.S. = 75 MPH
eMAX = 8.0%
e = NC
P.C. - LG% = N/A
P.T. - LG% = N/A

Reloc. Curve Data
ROAD I20EBR4
P.I. = 1820+96.15
Δ = 0° 57' 28" (RT)
D = 0° 21' 21"
T = 134.59'
L = 269.17'
E = 0.56'
R = 16,100.00'
D.S. = 75 MPH
eMAX = 8.0%
e = NC
P.C. - LG% = N/A
P.T. - LG% = N/A

SOUTH CAROLINA
RUMMEL, KLEPPER & KAHL LLP
No. 334
CERTIFICATE OF AUTHORIZATION

CONTRACTOR:
75 YEARS 1947 2022
CROWDER

PREPARED BY:
100 years RK&K

DO NOT USE FOR CONSTRUCTION

SCDOT
CONCEPTUAL PLANS

PLAN SHEET

SCALE 1" = 50'

\\ad.rkk.com\fs\Cloud\Mktg\Proposals\2022\SC\SCDOT\P2001-009_I-20 Bridge over Wateree DB\Preliminary Design\Roadway\Plan Sheets\r29450pf8.dgn
zwilson
2/8/2023

06_Plan_Profile_Sheet_50

FED. RD. DIV. NO.	STATE	COUNTY	PROJECT ID	ROUTE NO.	SHEET NO.
3	S.C.	KERSHAW	P029450	I-20	8A

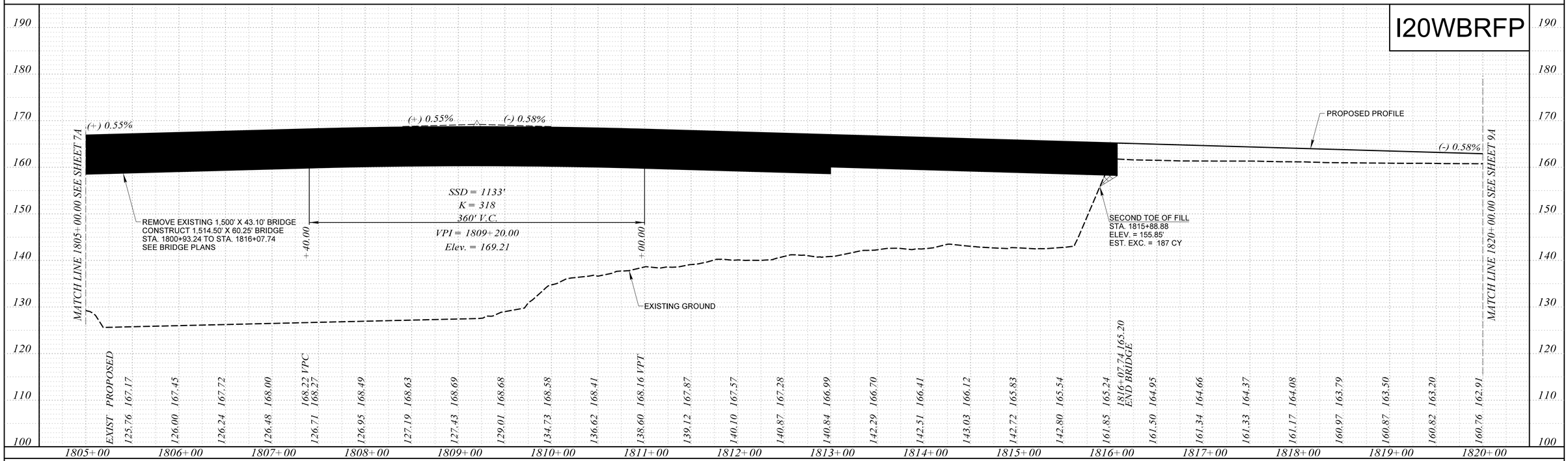

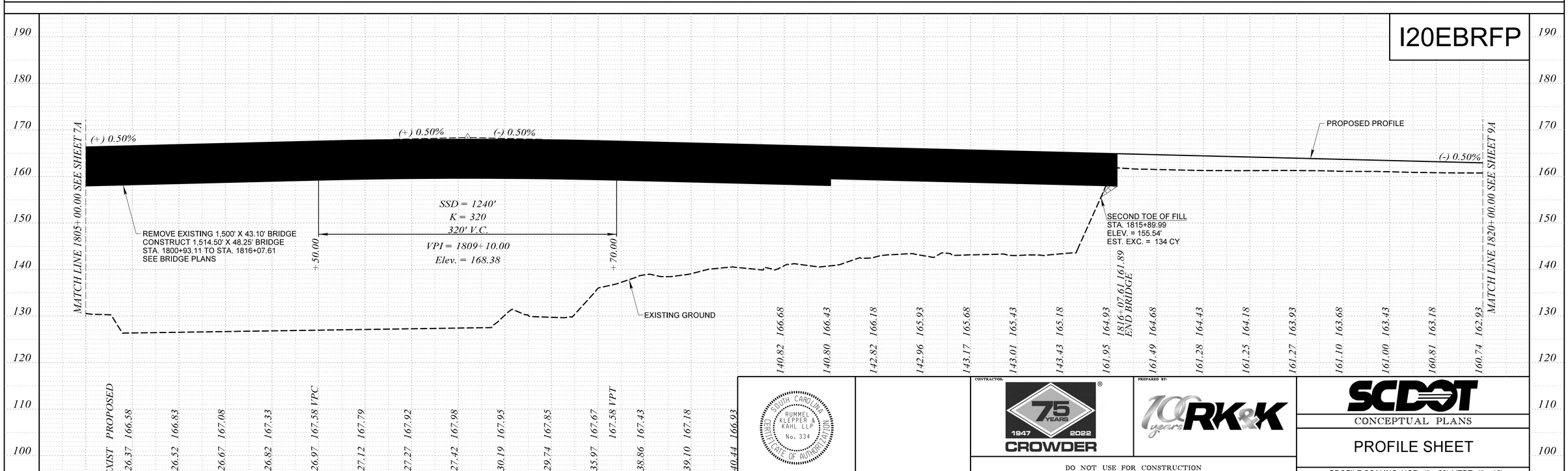

SOUTH CAROLINA
RUMMEL KLEPPER & KAHL LLP
No. 334
CERTIFICATE OF AUTHORIZATION

CONTRACTOR:
CROWDER 75 YEARS 1947 2022

PREPARED BY:
RK&K 100 years

DO NOT USE FOR CONSTRUCTION

SCDOT
CONCEPTUAL PLANS

PROFILE SHEET

PROFILE SCALING: HOR. 1" = 50', VERT. 1" = 10'

\\ad.rkk.com\fs\Cloud\Mktg\Proposals\2022\SC\SCDOT\P2001-009_I-20 Bridge over Wateree DB\Preliminary Design\Roadway\Profile Sheets\r29450_pf8A.dgn
zwilson
2/8/2023

06_Profile_Sheet_20

FED. RD. DIV. NO.	STATE	COUNTY	PROJECT ID	ROUTE NO.	SHEET NO.
3	S.C.	KERSHAW	P029450	I-20	9

DUAL BRIDGES OVER WATEREE RIVER

N

Reloc. Curve Data
ROAD I20WBR3
P.I. = 1818+57.41
= 1° 36' 26" (RT)
D = 0° 21' 21"
T = 225.82'
L = 451.60'
E = 1.58'
R = 16,100.00'
D.S. = 75 MPH
eMAX = 8.0%
e = NC
P.C. - LG% = N/A
P.T. - LG% = N/A

Reloc. Curve Data
ROAD I20WBR4
P.I. = 1823+09.01
Δ = 1° 36' 26" (LT)
D = 0° 21' 21"
T = 225.82'
L = 451.60'
E = 1.58'
R = 16,100.00'
D.S. = 75 MPH
eMAX = 8.0%
e = NC
P.C. - LG% = N/A
P.T. - LG% = N/A

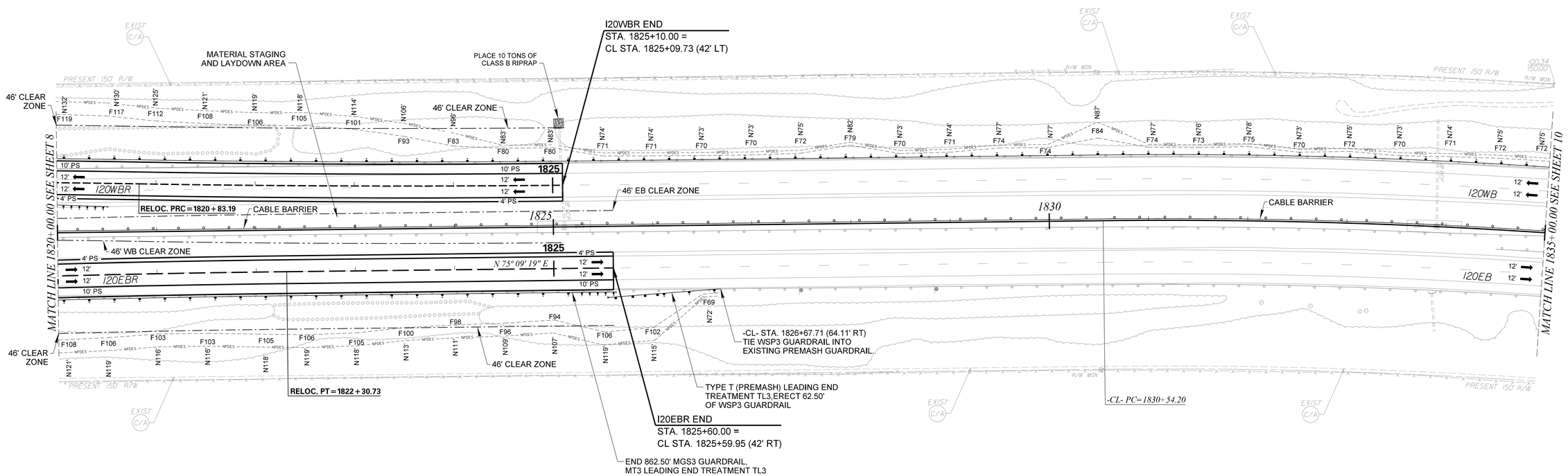

Reloc. Curve Data
ROAD I20EBR4
P.I. = 1820+96.15
Δ = 0° 57' 28" (RT)
D = 0° 21' 21"
T = 134.59'
L = 269.17'
E = 0.56'
R = 16,100.00'
D.S. = 75 MPH
eMAX = 8.0%
e = NC
P.C. - LG% = N/A
P.T. - LG% = N/A

P.I. = 1841+76.49
Δ = 22° 09' 54" (RT)
D = 1° 00' 00"
T = 1,122.29'
L = 2,216.51'
E = 108.88'
R = 5,729.58'

SOUTH CAROLINA NATIONAL CERTIFICATE OF AUTHORIZATION
RUMMEL KLEPPER & KAHL LLP
No. 334

CONTRACTOR:
75 YEARS 1947 2022 CROWDER

PREPARED BY:
100 years RK&K

DO NOT USE FOR CONSTRUCTION

SCDOT
CONCEPTUAL PLANS

PLAN SHEET

SCALE 1" = 50'

\\ad.rkk.com\fs\Cloud\Mktg\Proposals\2022\SC\SCDOT\P2001-009_I-20 Bridge over Wateree DB\Preliminary Design\Roadway\Plan Sheets\r29450pf9.dgn
zwilson
2/8/2023

06_Plan_Profile_Sheet_50

FED. RD. DIV. NO.	STATE	COUNTY	PROJECT ID	ROUTE NO.	SHEET NO.
3	S.C.	KERSHAW	P029450	I-20	9A

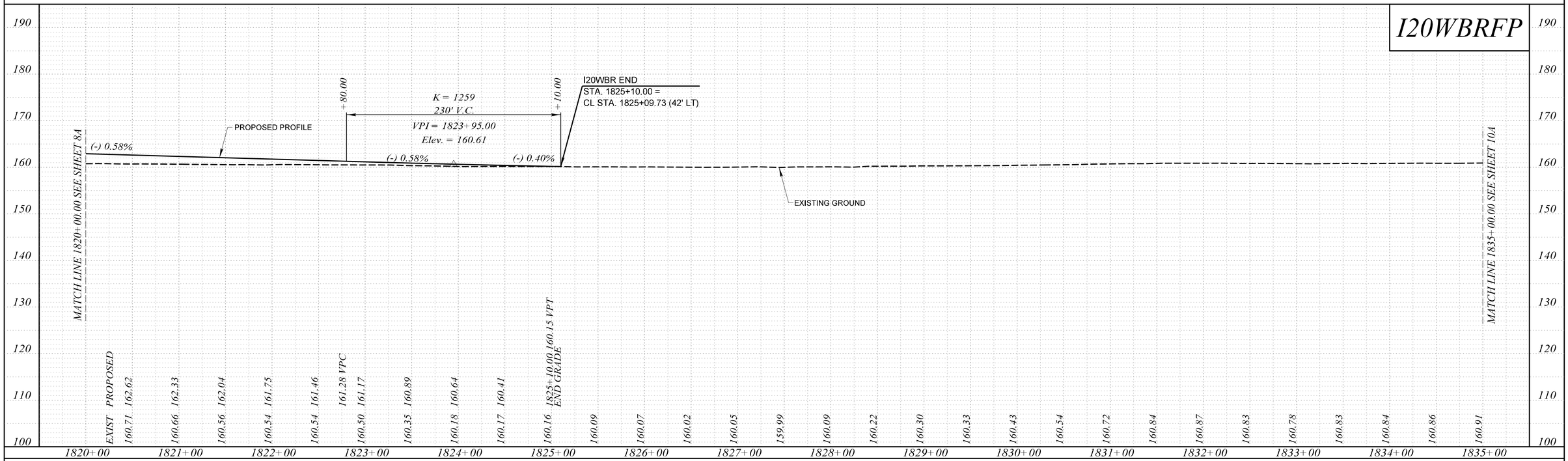

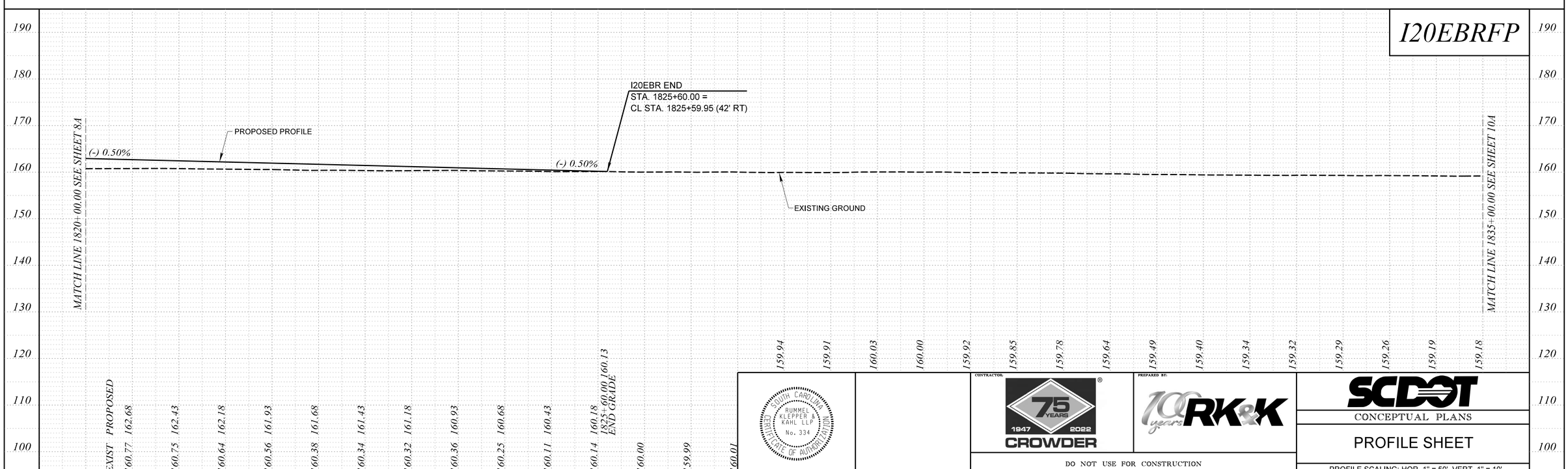

SOUTH CAROLINA
RUMMEL KLEPPER & KAHL LLP
No. 334
CERTIFICATE OF AUTHORIZATION

CONTRACTOR:
CROWDER 75 YEARS 1947 2022

PREPARED BY:
RK&K 100 years

DO NOT USE FOR CONSTRUCTION

SCDOT
CONCEPTUAL PLANS

PROFILE SHEET

PROFILE SCALING: HOR. 1" = 50', VERT. 1" = 10'

\\ad.rkk.com\fs\Cloud\Mktg\Proposals\2022\SC\SCDOT\P2001-009_I-20 Bridge over Wateree DB\Preliminary Design\Roadway\Profile Sheets\r29450_pf9A.dgn
zwilson
2/8/2023

06_Profile_Sheet_20

FED. RD. DIV. NO.	STATE	COUNTY	PROJECT ID	ROUTE NO.	SHEET NO.
3	S.C.	KERSHAW	P029450	I-20	10

DUAL BRIDGES OVER WATEREE RIVER

P.I. = 1841+76.49
Δ = 22° 09' 54" (RT)
D = 1° 00' 00"
T = 1,122.29'
L = 2,216.51'
E = 108.88'
R = 5,729.58'

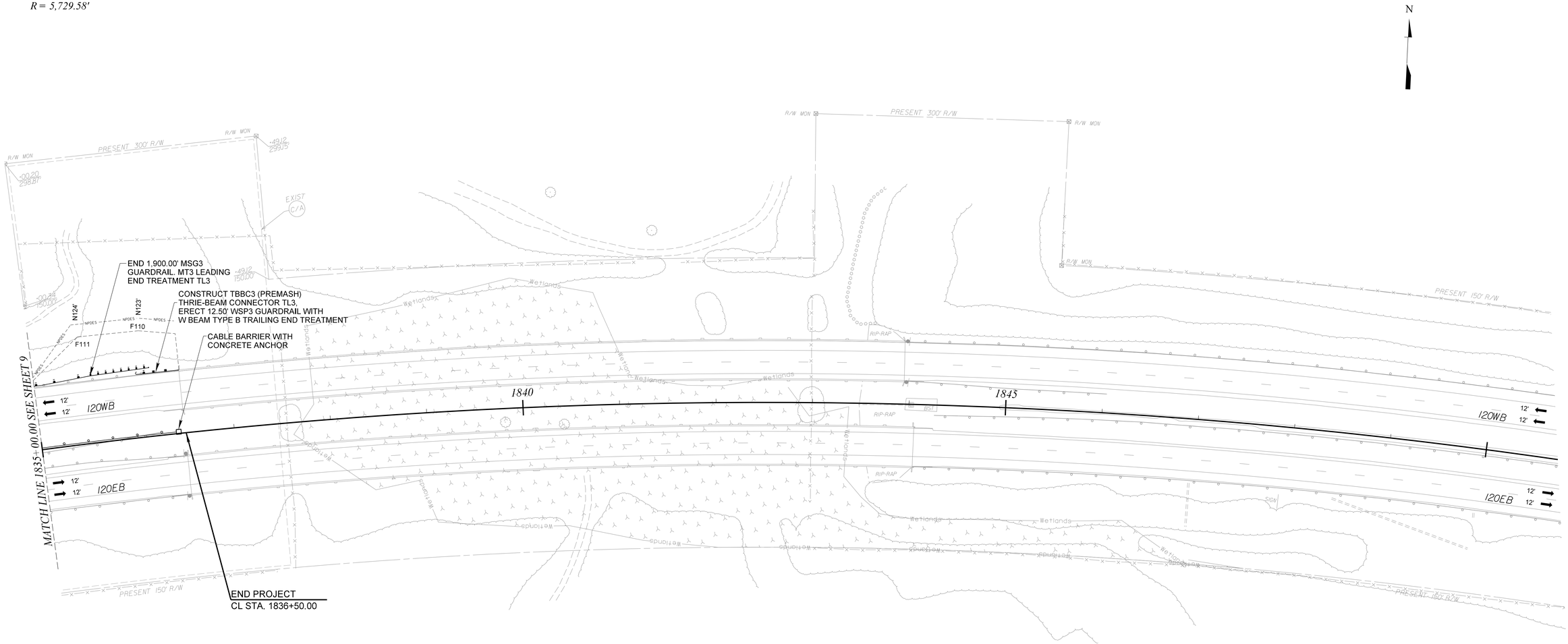

SOUTH CAROLINA NATIONAL CERTIFICATE OF AUTHORIZATION
RUMMEL KLEPPER & KAHL LLP
No. 334

CONTRACTOR: CROWDER 75 YEARS 1947 2022

PREPARED BY: RK&K 100 years

DO NOT USE FOR CONSTRUCTION

SCDOT
CONCEPTUAL PLANS

PLAN SHEET

SCALE 1" = 50'

\\ad.rkk.com\fs\Cloud\Mktg\Proposals\2022\SC\SCDOT\P2001-009_I-20 Bridge over Wateree DB\Preliminary Design\Roadway\Plan Sheets\r29450pf10.dgn
zwilson
2/8/2023

06_Plan_Profile_Sheet_50

FED. RD. DIV. NO.	STATE	COUNTY	PROJECT ID	ROUTE NO.	SHEET NO.
3	S.C.	KERSHAW	P029450	I-20	10A

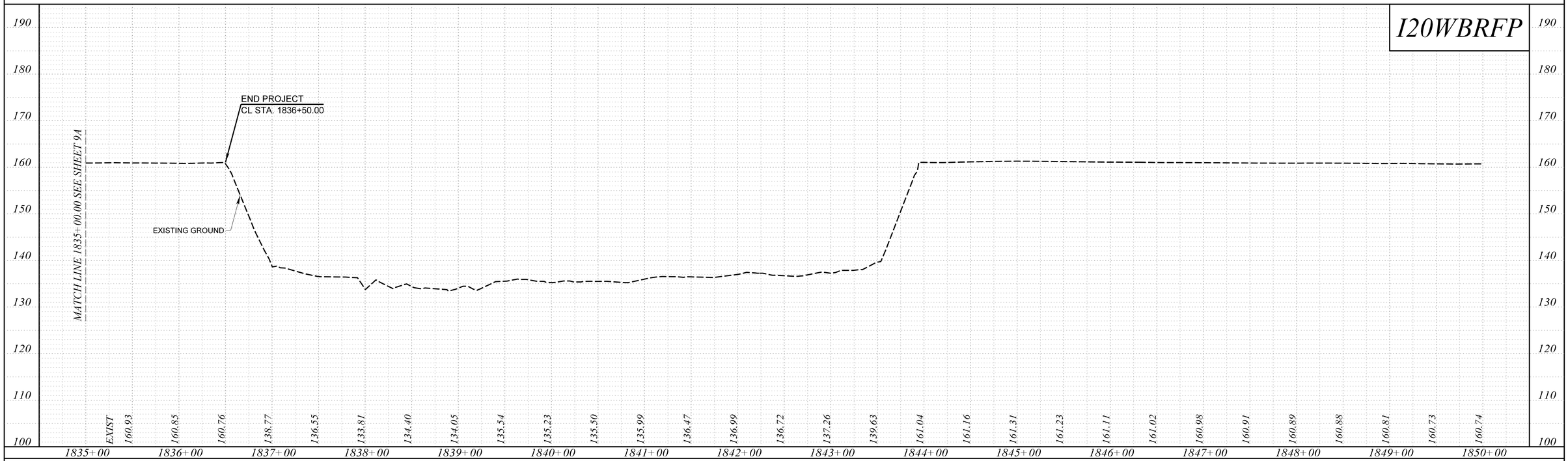

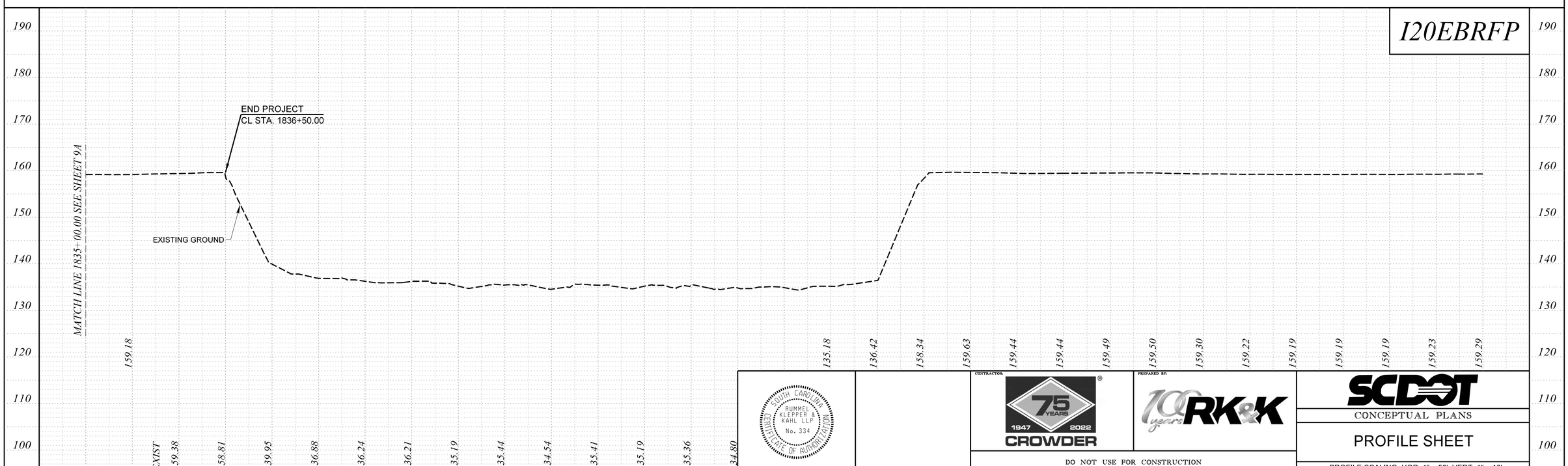

SOUTH CAROLINA
RUMMEL KLEPPER & KAHL LLP
No. 334
CERTIFICATE OF AUTHORIZATION

CONTRACTOR:
CROWDER 75 YEARS 1947 2022

PREPARED BY:
RK&K 100 years

DO NOT USE FOR CONSTRUCTION

SCDOT
CONCEPTUAL PLANS

PROFILE SHEET

PROFILE SCALING: HOR. 1" = 50', VERT. 1" = 10'

\\ad.rkk.com\fs\Cloud\Mktg\Proposals\2022\SC\SCDOT\P2001-009_I-20 Bridge over Wateree DB\Preliminary Design\Roadway\Profile Sheets\r29450_pf10A.dgn
zwilson
2/8/2023

A.2 - Maintenance of Traffic Plans/ or Documents

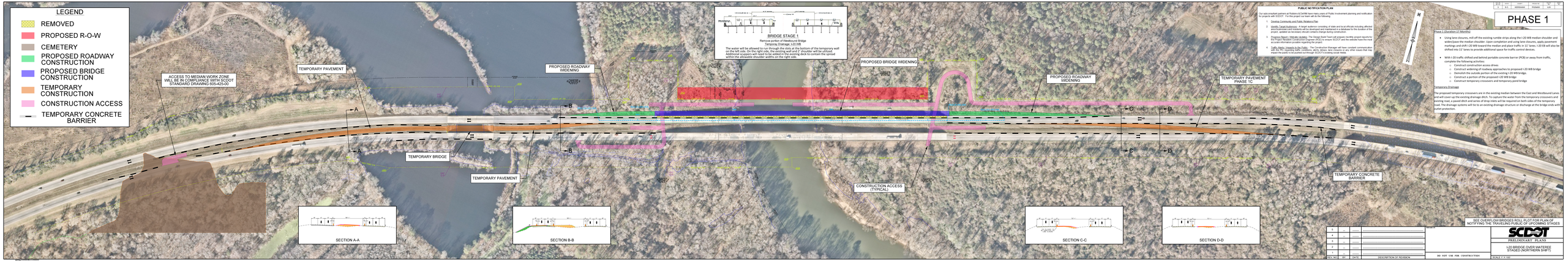
LEGEND
REMOVED
PROPOSED R-O-W
CEMETERY
PROPOSED ROADWAY CONSTRUCTION
PROPOSED BRIDGE CONSTRUCTION
TEMPORARY CONSTRUCTION
CONSTRUCTION ACCESS
TEMPORARY CONCRETE BARRIER
ACCESS TO MEDIAN WORK ZONE WILL BE IN COMPLIANCE WITH SCDOT STANDARD DRAWING 605-425-00
TEMPORARY PAVEMENT
PROPOSED ROADWAY WIDENING
PROPOSED BRIDGE WIDENING
PROPOSED ROADWAY WIDENING
TEMPORARY PAVEMENT PHASE 1C
TEMPORARY BRIDGE
TEMPORARY PAVEMENT
CONSTRUCTION ACCESS (TYPICAL)
TEMPORARY CONCRETE BARRIER
A
A'
B
B'
C
C'
D
D'
SECTION A-A
SECTION B-B
SECTION C-C
SECTION D-D
BRIDGE STAGE 1
Remove portion of Westbound Bridge
Temporary Drainage: 1:20.000
The water will be allowed to run through the slots at the bottom of the temporary wall on the left side. On the right side, a temporary ditch and inlets will be utilized. Additional crossport will need to be added in the existing deck to contain the spread within the allowable shoulder widths on the right side.
PUBLIC INFORMATION PLAN
Our subconsultant partners at Fickers & Ashley have many years of Public Involvement planning and notification for projects with SCDOT. For this project our team will do the following:
1. Develop Community and Public Relations Plan
2. Identify Target Audiences: A target audience consisting of state and local officials including affected area businesses and residents will be developed and maintained in a database for the duration of the project, updated as necessary should contacts change during construction.
3. Progress Report / Website Updates: The Design Build Team will prepare monthly project reports for the Project Manager. The Project Manager will post information on the secure SCDOT and the website have the most accurate information possible regarding the project.
4. Traffic Alerts Unpaved to the Public: The Construction Manager will have constant communication with the TRC regarding traffic conditions, alerts, delays, lane closures or any other issues that may impact the public to be pushed out through SCDOT's existing social media.
N
PHASE 1
Phase 1 (Duration 17 Months)
- Using lane closures, mill off the existing rumble strips along the I-20 WB median shoulder and widen/pave the median shoulder. Upon completion and using lane closures, apply pavement markings and shift I-20 WB toward the median and place traffic in 12' lanes. I-20 EB will also be shifted into 12' lanes to provide additional space for traffic control devices.
- With I-20 traffic shifted and behind portable concrete barrier (PCB) or away from traffic, complete the following activities:
  - Construct temporary access drives
  - Construct widening of roadway approaches to proposed I-20 WB bridge
  - Demolish the outside portion of the existing I-20 WB bridge
  - Construct a portion of the proposed I-20 WB bridge
  - Construct temporary crossovers and temporary pond bridge
Temporary Drainage
The proposed temporary crossovers are in the existing median between the East and Westbound Lanes and will cover up the existing drainage ditch. To capture the water from the temporary crossovers and existing road, a paved ditch and series of drop inlets will be required on both sides of the temporary road. The drainage systems will tie to an existing drainage structure or discharge at the bridge ends with outlet protection.
SEE OVERFLOW BRIDGES ROLL PLOT FOR PLAN OF NOTIFYING THE TRAVELING PUBLIC OF UPCOMING STAGES
SCDOT
PRELIMINARY PLANS
I-20 BRIDGE OVER WATEREE
STAGED (NORTHERN SHIFT)
SCALE 1" = 100'
DO NOT USE FOR CONSTRUCTION
REV. NO. BY DATE DESCRIPTION OF REVISION
6
5
4
3
2
1
0
DESIGNED K.C. CHKD. KERRIGANN DRAWN PROBERTS REVIEW W. LEE
SHEET 1 OF 1

PHASE 2

LEGEND

- REMOVED
- PROPOSED DESIGN
- PROPOSED R-O-W
- CEMETERY
- TEMPORARY PAVEMENT
- CONSTRUCTION ACCESS
- CONSTRUCTION ACCESS TO BE REMOVED
- TEMPORARY CONCRETE BARRIER

ACCESS TO REMAIN FOR FUTURE USE, BUT NOT IN THIS PHASE

TEMPORARY PAVEMENT

REMOVE AND REPLACE EASTBOUND BRIDGE

TEMPORARY PAVEMENT

TEMPORARY CONCRETE BARRIER

SECTION A-A

SECTION B-B

SECTION C-C

SECTION D-D

Phase 2 (Duration 30 Months)

- With Phase 2 construction complete and using lane closures, pave I-20 WB as required for the temporary crossovers where they cross existing I-20 WB alignment, place temporary markings and shift I-20 WB onto the outside bridge widening.
- Once I-20 WB is shifted into the temporary pattern, and using lane closures, place PCB and shift I-20 EB traffic onto the temporary crossover.
- With I-20 EB on the temporary crossover, remove the existing I-20 EB bridge and construct the proposed I-20 EB bridge in its entirety.
- See FATC S and FATC S1 for temporary crossovers and temporary pond bridge design details.

Temporary Drainage

- The proposed temporary crossovers are in the existing median between the East and West bound lanes of I-20 and will require temporary drainage. The flow of water from the temporary crossovers and existing road, a paved ditch and series of drop inlets will be required on both sides of the temporary road. The drainage systems will tie to an existing drainage structure or discharge at the bridge ends with outlet protection.

REV. NO.	BY	DATE	DESCRIPTION OF REVISION
8			
7			
6			
5			
4			
3			
2			
1			

DO NOT USE FOR CONSTRUCTION

SCDOT

PRELIMINARY PLANS

I-20 BRIDGE OVER WATEREE
STAGED (NORTHERN SHIFT)

SCALE: 1" = 100'

2	R.C.	KERSHAW	PROWSE	1:20
1	R.C.	KERSHAW	PROWSE	1:20

PHASE 3

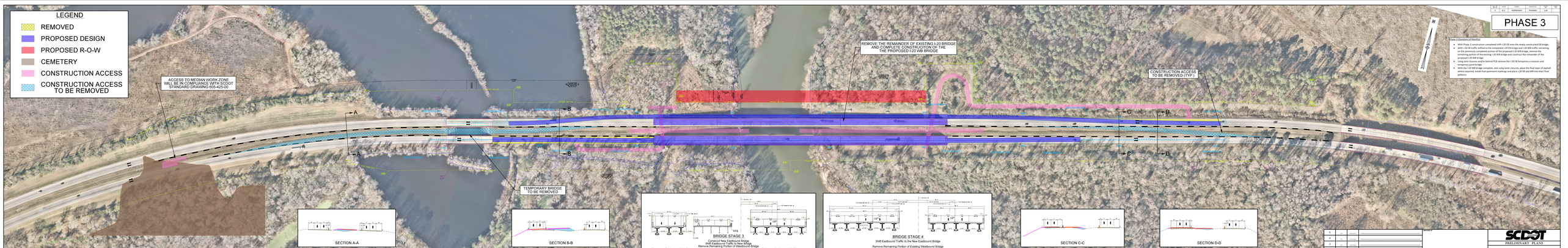

Phase 3 Sequence of Work

- With Phase 2 construction completed shift I-20 EB onto the newly constructed EB bridge.
- With I-20 EB traffic shifted to the completed I-20 EB bridge and I-20 WB traffic remaining on the previously completed portion of the proposed I-20 WB bridge, remove the remaining portion of the existing I-20 WB bridge and construct the remainder of the proposed I-20 WB bridge.
- Using lane closures and/or behind PCB remove the I-20 EB temporary crossover and construct the permanent.
- With the I-20 WB bridge complete, and using lane closures, place the final layer of asphalt where required, install final pavement markings and place I-20 EB and WB into their final pattern.

REV. NO.	BY	DATE	DESCRIPTION OF REVISION
5			
4			
3			
2			
1			

DO NOT USE FOR CONSTRUCTION

SCDOT

PRELIMINARY PLANS

I-20 BRIDGE OVER WATEREE STAGED (NORTHERN SHIFT)

SCALE 1" = 100'

OVERFLOW BRIDGES

Overflow Bridge Rehabilitation (Duration 5 Months)

- Construct construction access from I-20 WB for access to elements of work under the overflow bridges.
- Traffic control for overflow bridge rehabilitation activities will be coordinated with traffic control for the main bridge replacement when there is concurrent work scheduled.
- Under bridge rehabilitation:
  - Much of the rehabilitation under the bridges will not require traffic control as the work will be accessed from under the bridge and will not affect the safety of the bridge travel lanes.
  - When required shoulder and lane closures will be installed during allowable lane closure hours.
- Deck, joint, and approach slab rehabilitation:
  - Where the repairs affect only a shoulder or travel lane and applicable work zone lateral offset can be provided, work will be performed utilizing shoulder and lane closures during allowable lane closure hours.
  - Where the repairs affect areas of the travel lanes that cannot be safely performed with standard lane closures, then a left lane closure will be utilized, and the open right lane will be shifted (via channelizing devices) partially onto the right shoulder. This will be performed during allowable lane closure hours.
- Parapet replacement / repair
  - Parapet demolition and replacement will be performed with adjacent lane closures during allowable lane closure hours.

- Note that to provide time for pavement demolition, rebar cleaning, rebar placement, concrete pour, and concrete curing; it is anticipated that this traffic pattern may be in place for multiple days, but still within the allowable lane closure hours.

Plan for notifying the traveling public of upcoming stages

Per the project special provisions and contract requirements our team will coordinate with the Department to aid in promoting public awareness. This will consist of many activities including, but not limited to providing advanced notice of any construction activities with significant impact to public, preparing advertisements and media announcements, and preparing and submitting Quarterly Status Report/Newsletter for the SCDOT. In addition to requirements set forth in the Community and Public Relations Plan, our team will institute a Traffic Management Task Force (TMTF) and have monthly meetings.

Our Team's TMTF includes construction and design personnel who are qualified and have successfully managed traffic for construction projects along high-traffic corridors. Representatives from SCDOT and emergency personnel will also be invited to participate in this task force. These individuals will be involved in the development of our Traffic Control Plan, as well as its monitoring and implementation throughout construction. The task force will facilitate internal communications and focus on coordinating and evaluating traffic management strategies with emergency management services throughout the life of the project. This is also an opportune time to coordinate the construction activities schedule and processes for notifying the public of upcoming phases of construction.

REV. NO.	BY	DATE	DESCRIPTION OF REVISION
5	–	–	–
4	–	–	–
3	–	–	–
2	–	–	–
1	–	–	–

DO NOT USE FOR CONSTRUCTION

SCDOT
PRELIMINARY PLANS
I-20 BRIDGE OVER WATEREE
OVERFLOW BRIDGES - REHABILITATION
SCALE 1" = 100'

A.3 - Bridge Plans

Wateree_ts.dgn

CONTRACT ID	SHEET NO.
2847360	1

INDEX OF SHEETS

1. Title Sheet
2. Eastbound Bridge Plan of Profile (1 of 3)
3. Eastbound Bridge Plan of Profile (2 of 3)
4. Eastbound Bridge Plan of Profile (3 of 3)
5. Westbound Bridge Plan of Profile (1 of 3)
6. Westbound Bridge Plan of Profile (2 of 3)
7. Westbound Bridge Plan of Profile (3 of 3)
8. Bridge Staging (1 of 3)
9. Bridge Staging (2 of 3)
10. Bridge Staging (3 of 3)
11. End Bents 1 and 11
12. Interior Bents
13. Superstructure Typical Section
14. Construction Access (1 of 3)
15. Construction Access (2 of 3)
16. Construction Access (3 of 3)
17. Future Typical Section

South Carolina Department of Transportation

CONCEPTUAL PLANS FOR KERSHAW COUNTY CONTRACT ID 2847360 ROUTE I-20 REPLACE DUAL BRIDGES OVER WATEREE RIVER

SITE LOCATION

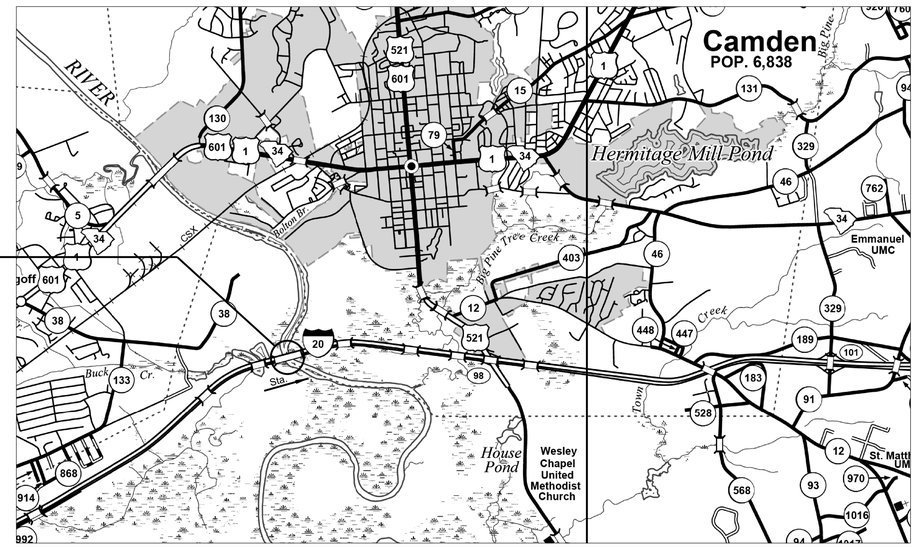

LAYOUT

Approximate Location of Bridge is

Latitude	34°- 13' - 03" N
Longitude	80°- 37' - 48" W

3 DAYS BEFORE DIGGING IN SOUTH CAROLINA

CALL 811

SOUTH CAROLINA 811 (SC811)
WWW.SC811.COM
ALL UTILITIES MAY NOT BE A MEMBER OF SC811

ASSET ID NOT ASSIGNED

TRAFFIC DATA

2025 ADT 42,754 V.P.D.

2045 ADT 57,583 V.P.D.

TRUCKS 15 %

	I-20 WB	I-20 EB	TOTAL	
NET LENGTH OF ROADWAY	0.000	0.000	0.000	MILES
NET LENGTH OF BRIDGES	0.286	0.286	0.572	MILES
NET LENGTH OF PROJECT	0.286	0.286	0.572	MILES
LENGTH OF EXCEPTIONS	0.000	0.000	0.000	MILES
GROSS LENGTH OF PROJECT	0.286	0.286	0.572	MILES

NOTE: EXCEPT AS MAY OTHERWISE BE SPECIFIED ON THE PLANS OR IN THE SPECIAL PROVISIONS, ALL MATERIALS AND WORKMANSHIP ON THIS PROJECT SHALL CONFORM TO THE SOUTH CAROLINA DEPARTMENT OF TRANSPORTATION STANDARD SPECIFICATIONS FOR HIGHWAY CONSTRUCTION (2007 EDITION) AND THE STANDARD DRAWINGS FOR ROAD CONSTRUCTION IN EFFECT AT THE TIME OF LETTING.

75 YEARS 1947 2022 CROWDER

100 years RK&K

2/6/2023 4:06:27 PM

REVIEWED		
DR.	KSH	LKA
	BY	CHK

1-23 DATE

DRAWING NO. 700-02

CONTRACT ID	SHEET NO.
2847360	2

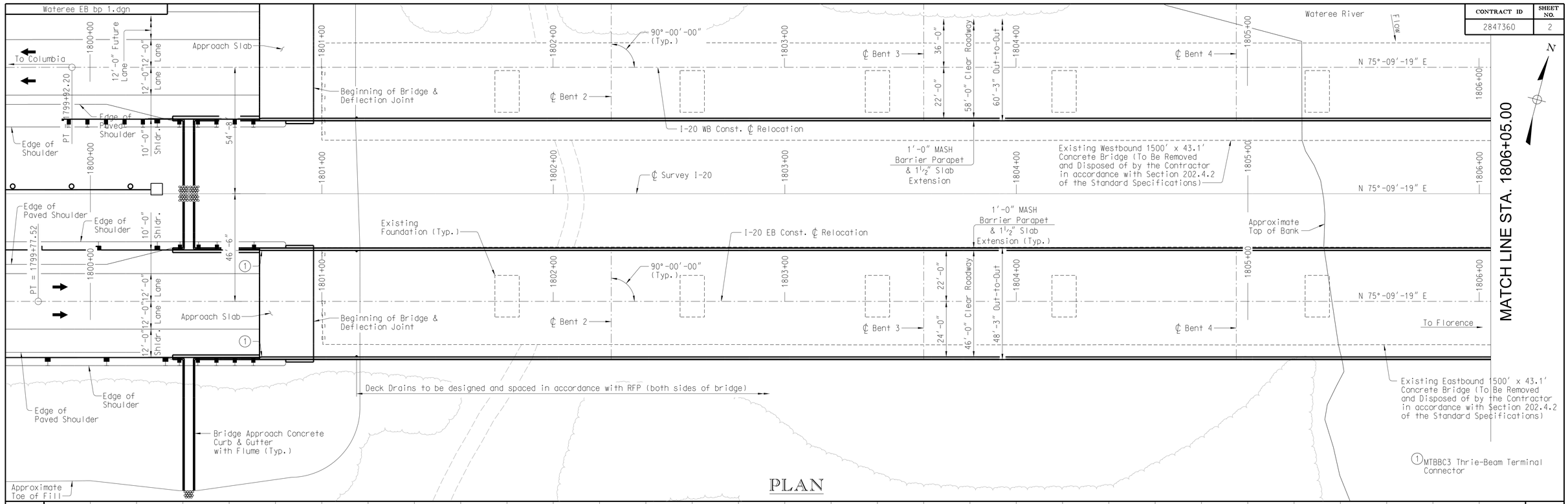

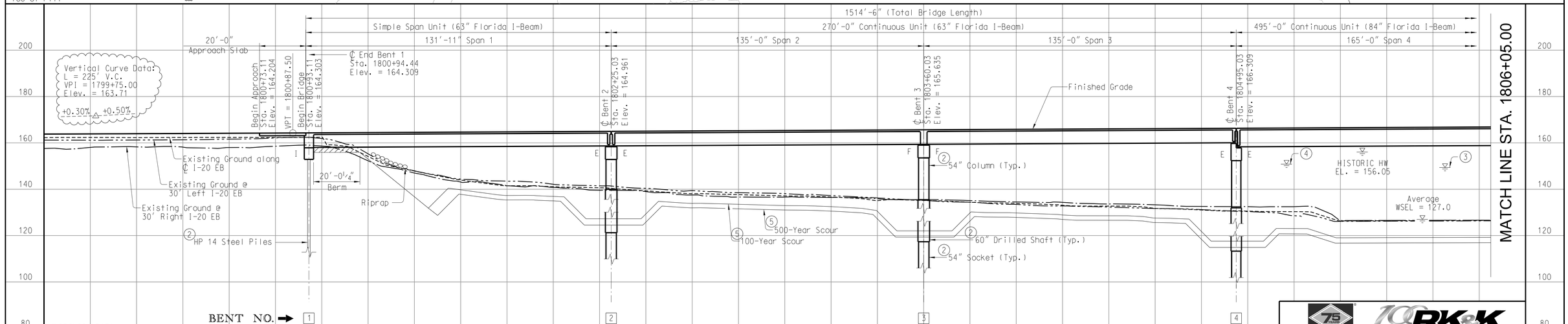

HYDROLOGY DATA:
D.A. = 5.070 sq. mi.
Q_{25} = 178.500 cfs
$Vel._{50}$ = 7.63 ft/sec.
50 Year W.S. Elev. = 147.00 ft
Q_{100} = 224.500 cfs
$Vel._{100}$ = 9.31 ft/sec.
100 Year W.S. Elev. = 148.14 ft
OVERTOPPING FLOOD:
Q = N/A
Probability < 0.002

2 Foundaton dependent upon Final Geotechnical Report
3 50-year W.S. elevation = 149.39, including 2.16 ft backwater
4 100-year W.S. elevation = 150.81, including 2.29 ft backwater
5 Scour profile is based on provided soil information and may vary after additional investigations.

Excavate hatched area
"F" denotes Fixed Bearing
"E" denotes Expansion Bearing
"I" denotes Integral Bent

SOUTH CAROLINA RUMMEL KLEPPER & KAHL LLP No. 334 CERTIFICATE OF AUTHORIZATION

REV.			
REV.			
REV.			
REVIEWED			
QUAN.			
DR.	KSH	LKA	1-23
DES.			
	BY	CHK.	DATE

CROWDER 75 YEARS 1947 2022 — 100 years RK&K

SOUTH CAROLINA DEPARTMENT OF TRANSPORTATION

BRIDGE PLAN AND PROFILE
REPLACE I-20 EBL OVER WATEREE RIVER (1 of 3)

COUNTY: Kershaw
ROUTE: I-20 EB

Wateree EB bp 2.dgn

CONTRACT ID	SHEET NO.
2847360	3

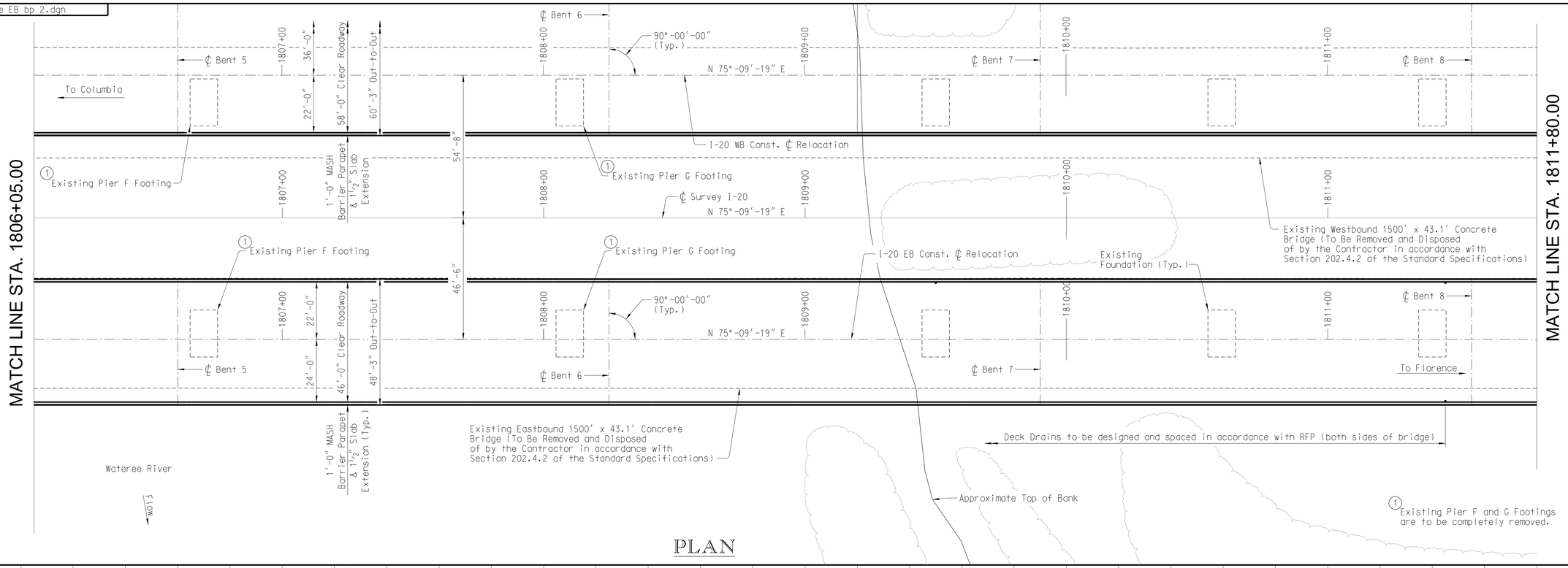

PLAN

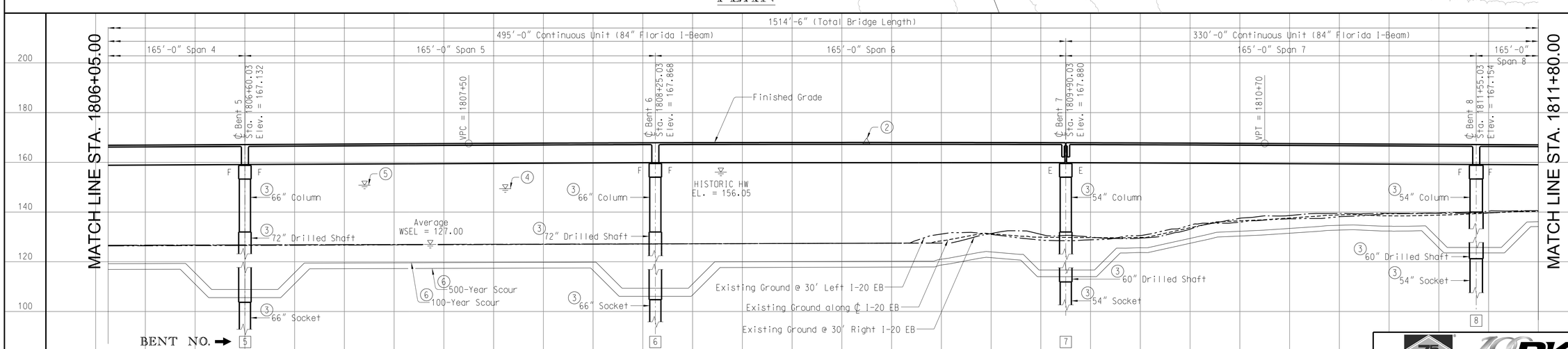

HYDROLOGY DATA:
D.A. = 5.070 sq. mi.
Q_{25} = 178.500 cfs
$Vel._{50}$ = 7.63 ft/sec.
50 Year W.S. Elev. = 147.00 ft
Q_{100} = 224.500 cfs
$Vel._{100}$ = 9.31 ft/sec.
100 Year W.S. Elev. = 148.14 ft
OVERTOPPING FLOOD:
Q = N/A
Probability < 0.002

(2) Vertical Curve Data:
L = 320' V.C.
VPI = 1809+10.00
Elev. = 168.38
-0.50%
+0.50%

(3) Foundation Dependent Upon Final Geotechnical Report

(4) 50-year W.S. elevation = 149.39, including 2.16 ft backwater

(5) 100-year W.S. elevation = 150.81, including 2.29 ft backwater

(6) Scour profile is based on provided soil information and may vary after additional investigations.

SECTION ALONG I-20 EB CONST. ℄ RELOCATION

"F" denotes Fixed Bearing
"E" denotes Expansion Bearing

SOUTH CAROLINA RUMMEL KLEPPER KAHL LLP No. 334 REGISTRATION OF ENGINEERING

REV.			
REV.			
REV.			
REVIEWED			
QUAN.			
DR.	KSH	LKA	1-23
DES.			
	BY	CHK.	DATE

CROWDER 75 1947 2022 — RK&K 100 years

SOUTH CAROLINA DEPARTMENT OF TRANSPORTATION

BRIDGE PLAN AND PROFILE
REPLACE I-20 EBL OVER
WATEREE RIVER (2 of 3)

COUNTY: KERSHAW
ROUTE: I-20 EB

Wateree EB bp 3.dgn

CONTRACT ID	SHEET NO.
2847360	4

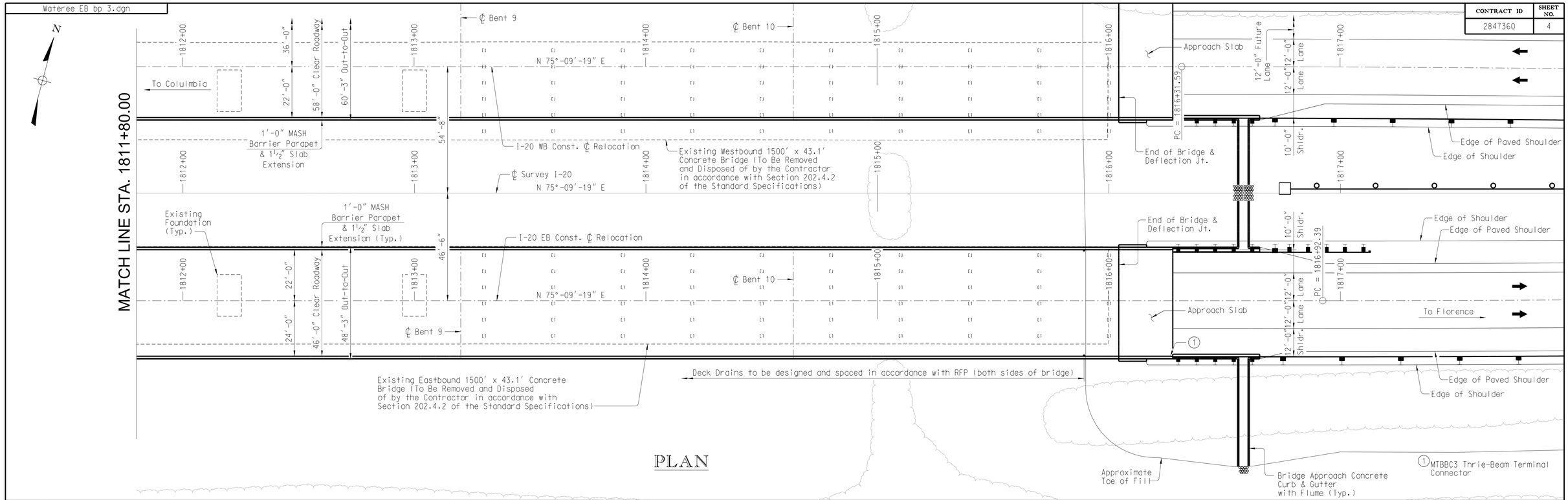

PLAN

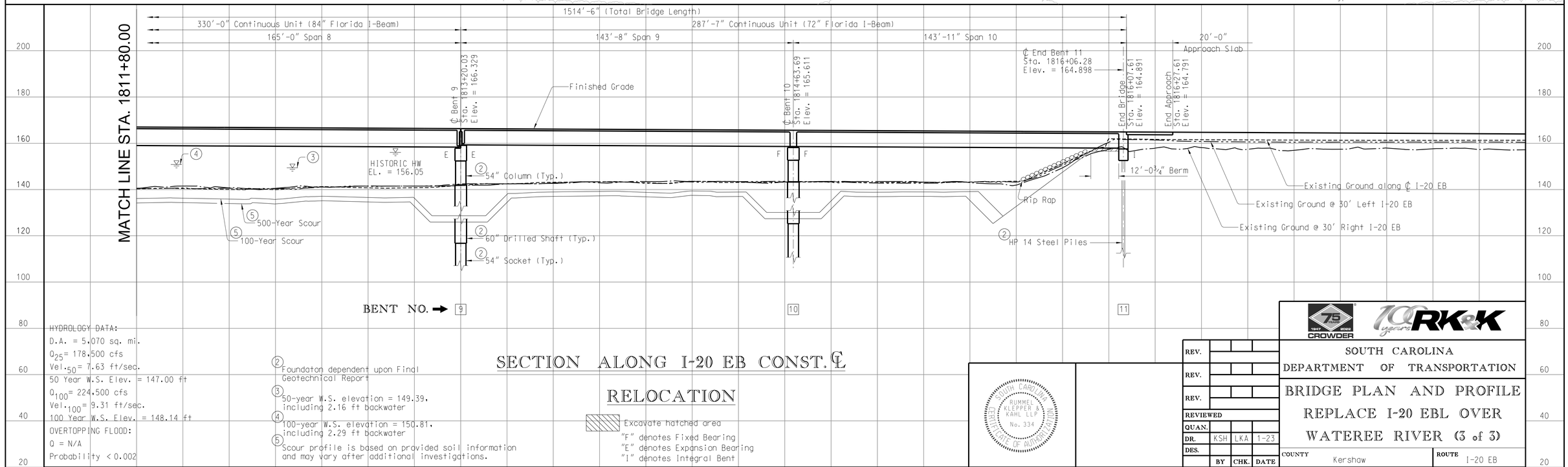

SECTION ALONG I-20 EB CONST. ℄ RELOCATION

HYDROLOGY DATA:
D.A. = 5.070 sq. mi.
Q_{25} = 178.500 cfs
$Vel._{50}$ = 7.63 ft/sec.
50 Year W.S. Elev. = 147.00 ft
Q_{100} = 224.500 cfs
$Vel._{100}$ = 9.31 ft/sec.
100 Year W.S. Elev. = 148.14 ft
OVERTOPPING FLOOD:
Q = N/A
Probability < 0.002

2 Foundaton dependent upon Final Geotechnical Report
3 50-year W.S. elevation = 149.39, including 2.16 ft backwater
4 100-year W.S. elevation = 150.81, including 2.29 ft backwater
5 Scour profile is based on provided soil information and may vary after additional investigations.

Excavate hatched area
"F" denotes Fixed Bearing
"E" denotes Expansion Bearing
"I" denotes Integral Bent

SOUTH CAROLINA CERTIFICATE OF AUTHORIZATION RUMMEL KLEPPER & KAHL LLP No. 334

REV.			
REV.			
REV.			
REVIEWED			
QUAN.			
DR.	KSH	LKA	1-23
DES.			
	BY	CHK.	DATE

CROWDER 1947 2022 — 75 years — 100 years RK&K

SOUTH CAROLINA DEPARTMENT OF TRANSPORTATION

BRIDGE PLAN AND PROFILE
REPLACE I-20 EBL OVER WATEREE RIVER (3 of 3)

COUNTY Kershaw — ROUTE I-20 EB

Wateree_WB_bp_1.dgn

CONTRACT ID	SHEET NO.
2847360	5

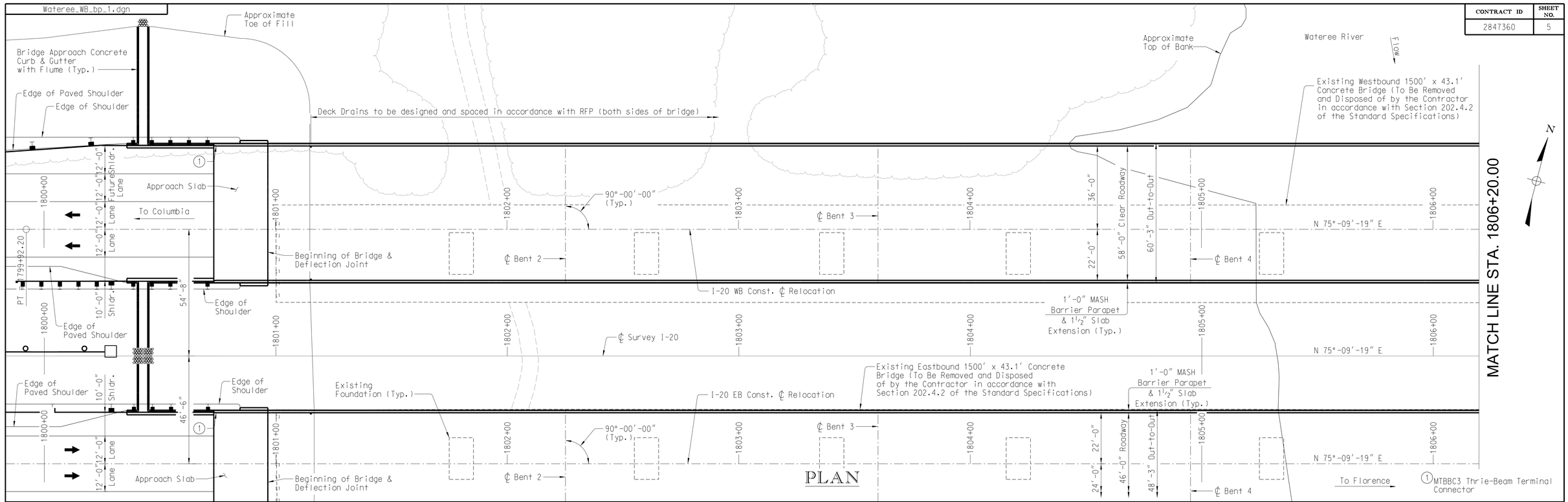

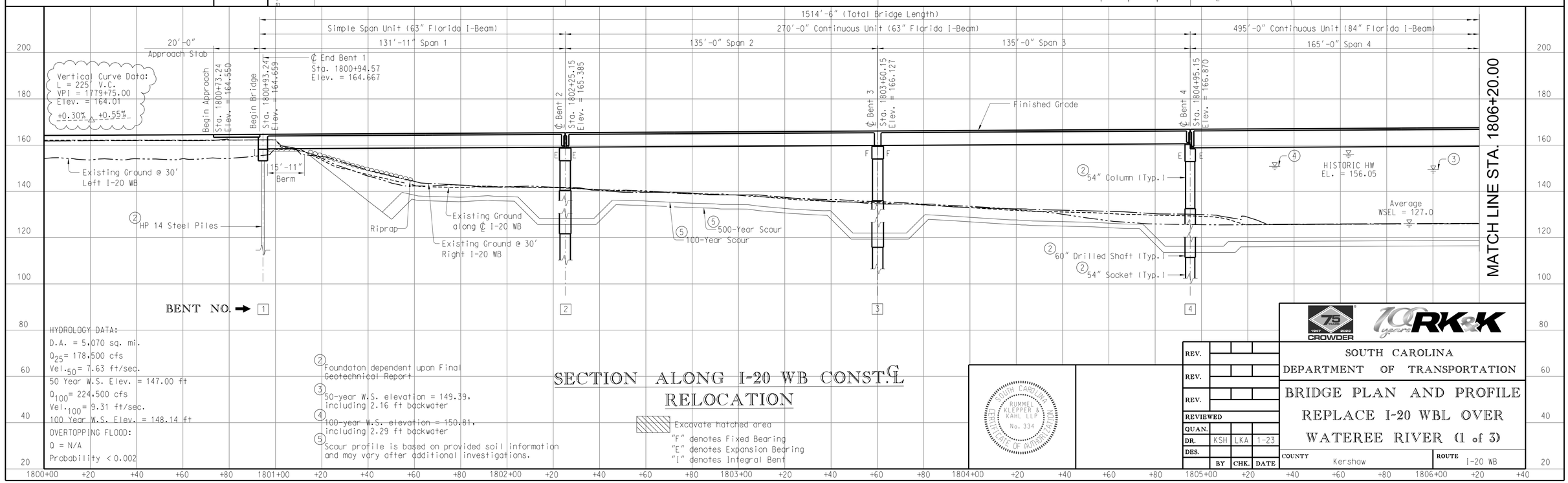

HYDROLOGY DATA:
D.A. = 5,070 sq. mi.
Q_{25} = 178,500 cfs
$Vel._{50}$ = 7.63 ft/sec.
50 Year W.S. Elev. = 147.00 ft
Q_{100} = 224,500 cfs
$Vel._{100}$ = 9.31 ft/sec.
100 Year W.S. Elev. = 148.14 ft
OVERTOPPING FLOOD:
Q = N/A
Probability < 0.002

(2) Foundaton dependent upon Final Geotechnical Report
(3) 50-year W.S. elevation = 149.39, including 2.16 ft backwater
(4) 100-year W.S. elevation = 150.81, including 2.29 ft backwater
(5) Scour profile is based on provided soil information and may vary after additional investigations.

SECTION ALONG I-20 WB CONST.℄ RELOCATION

Excavate hatched area
"F" denotes Fixed Bearing
"E" denotes Expansion Bearing
"I" denotes Integral Bent

SOUTH CAROLINA RUMMEL KLEPPER & KAHL LLP No. 334 CERTIFICATE OF AUTHORIZATION

REV.			
REV.			
REV.			
REVIEWED			
QUAN.			
DR.	KSH	LKA	1-23
DES.			
	BY	CHK.	DATE

CROWDER 75 YEARS 1947 2022 100 years RK&K

SOUTH CAROLINA DEPARTMENT OF TRANSPORTATION

BRIDGE PLAN AND PROFILE
REPLACE I-20 WBL OVER WATEREE RIVER (1 of 3)

COUNTY Kershaw
ROUTE I-20 WB

2/8/2023 3:12:42 PM

Wateree_WB_bp_2.dgn

CONTRACT ID	SHEET NO.
2847360	6

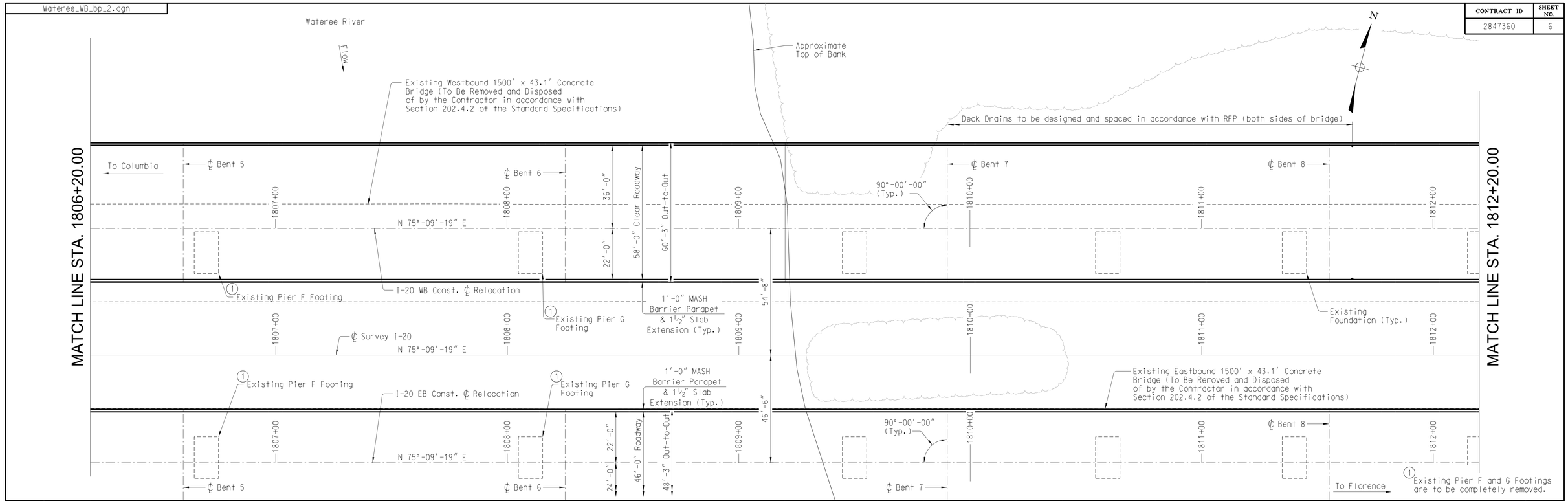

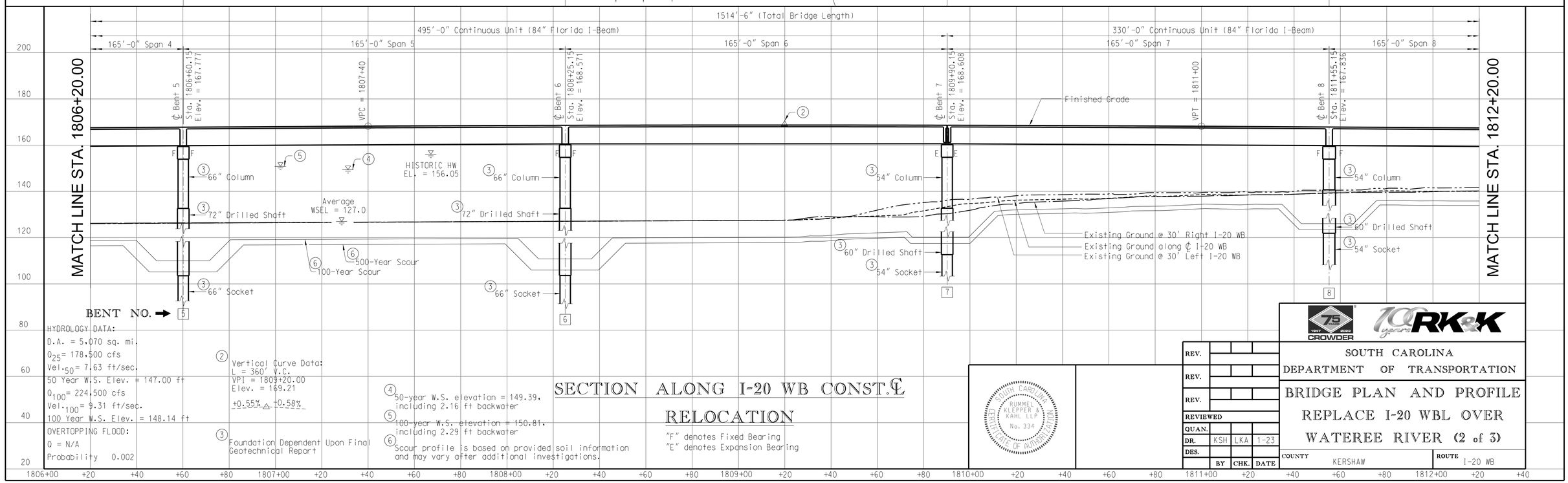

HYDROLOGY DATA:
D.A. = 5.070 sq. mi.
Q_{25} = 178,500 cfs
$Vel._{50}$ = 7.63 ft/sec.
50 Year W.S. Elev. = 147.00 ft
Q_{100} = 224,500 cfs
$Vel._{100}$ = 9.31 ft/sec.
100 Year W.S. Elev. = 148.14 ft

OVERTOPPING FLOOD:
Q = N/A
Probability 0.002

(2) Vertical Curve Data:
L = 360' V.C.
VPI = 1809+20.00
Elev. = 169.21
+0.55% △ +0.58%

(3) Foundation Dependent Upon Final Geotechnical Report

(4) 50-year W.S. elevation = 149.39, including 2.16 ft backwater

(5) 100-year W.S. elevation = 150.81, including 2.29 ft backwater

(6) Scour profile is based on provided soil information and may vary after additional investigations.

SECTION ALONG I-20 WB CONST.℄ RELOCATION

"F" denotes Fixed Bearing
"E" denotes Expansion Bearing

SOUTH CAROLINA RUMMEL, KLEPPER & KAHL LLP No. 334 CERTIFICATE OF AUTHORIZATION

REV.			
REV.			
REV.			
REVIEWED			
QUAN.			
DR.	KSH	LKA	1-23
DES.			
	BY	CHK.	DATE

CROWDER 75 years 1947 2022 — RK&K 100 years

SOUTH CAROLINA DEPARTMENT OF TRANSPORTATION

BRIDGE PLAN AND PROFILE
REPLACE I-20 WBL OVER WATEREE RIVER (2 of 3)

COUNTY KERSHAW | ROUTE I-20 WB

2/8/2023 3:20:20 PM

Wateree_WB_bp_3.dgn

CONTRACT ID	SHEET NO.
2847360	7

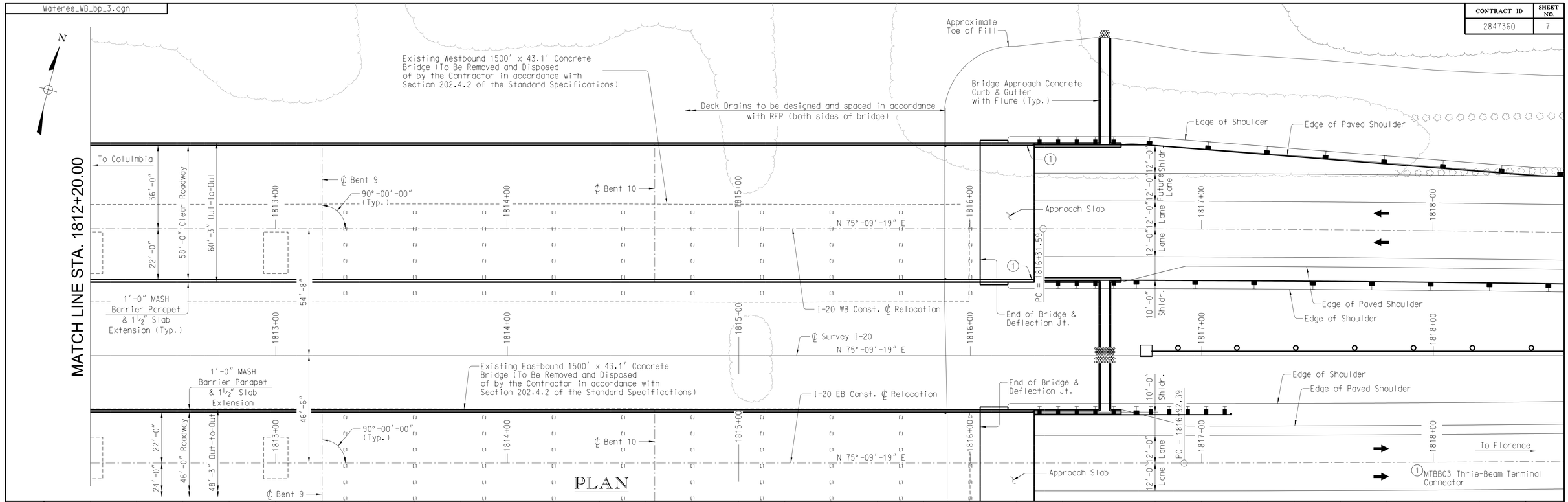

PLAN

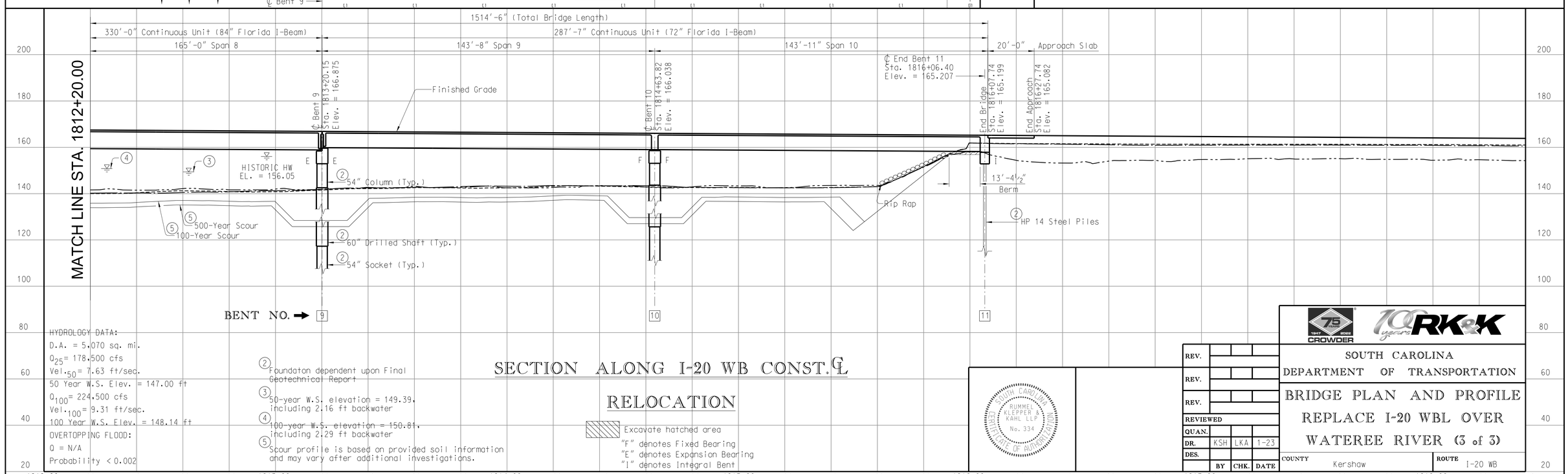

HYDROLOGY DATA:
D.A. = 5.070 sq. mi.
Q_{25} = 178.500 cfs
$Vel._{50}$ = 7.63 ft/sec.
50 Year W.S. Elev. = 147.00 ft
Q_{100} = 224.500 cfs
$Vel._{100}$ = 9.31 ft/sec.
100 Year W.S. Elev. = 148.14 ft
OVERTOPPING FLOOD:
Q = N/A
Probability < 0.002

(2) Foundaton dependent upon Final Geotechnical Report
(3) 50-year W.S. elevation = 149.39, including 2.16 ft backwater
(4) 100-year W.S. elevation = 150.81, including 2.29 ft backwater
(5) Scour profile is based on provided soil information and may vary after additional investigations.

SECTION ALONG I-20 WB CONST. ℄ RELOCATION

Excavate hatched area
"F" denotes Fixed Bearing
"E" denotes Expansion Bearing
"I" denotes Integral Bent

SOUTH CAROLINA RUMMEL KLEPPER & KAHL LLP No. 334 CERTIFICATE OF AUTHORIZATION

REV.			
REV.			
REV.			
REVIEWED			
QUAN.			
DR.	KSH	LKA	1-23
DES.			
	BY	CHK.	DATE

CROWDER 75 YEARS 1947 2022 — RK&K 100 years

SOUTH CAROLINA DEPARTMENT OF TRANSPORTATION

BRIDGE PLAN AND PROFILE
REPLACE I-20 WBL OVER WATEREE RIVER (3 of 3)

COUNTY: Kershaw
ROUTE: I-20 WB

2/8/2023 3:31:39 PM

Wateree_br_staging.dgn

CONTRACT ID	SHEET NO.
2847360	8

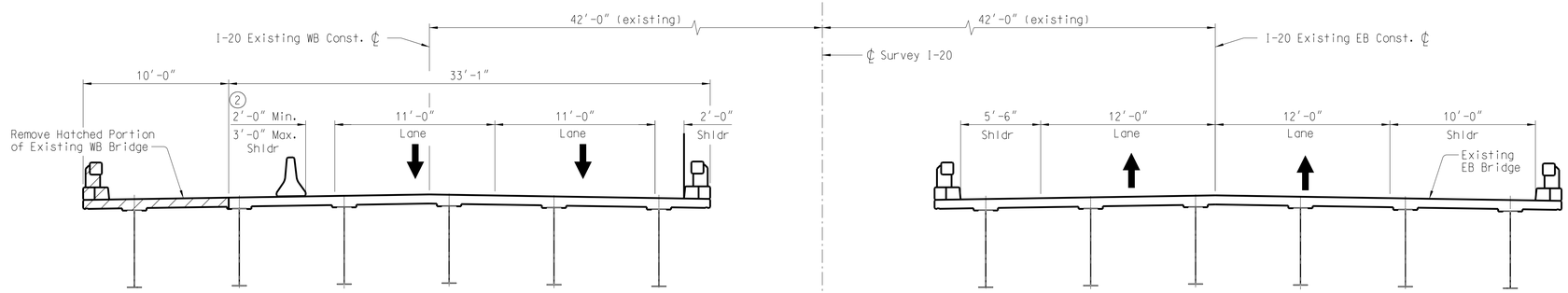

STAGE 1

Remove portion of Westbound Bridge

Rolled Beams in Spans 1-4 and 6-8 shown.
See note 1 for additional information.

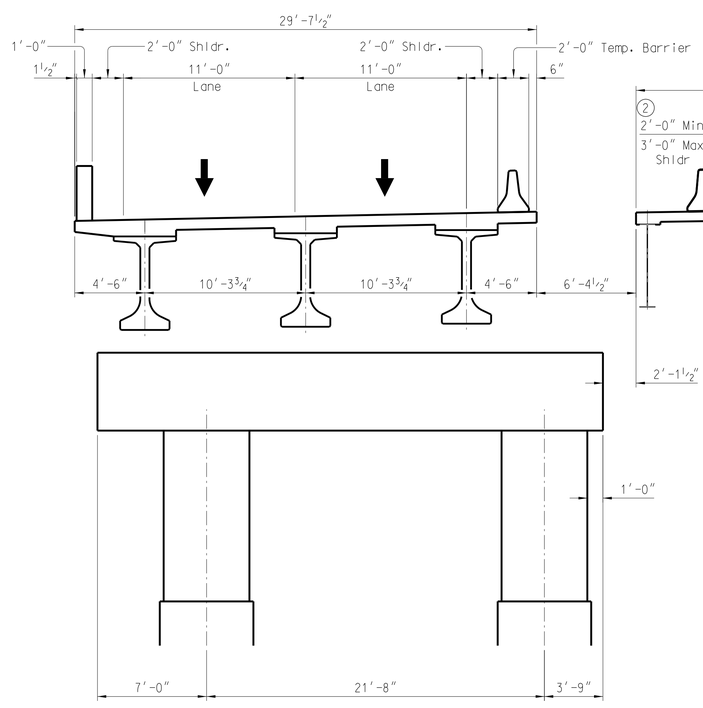

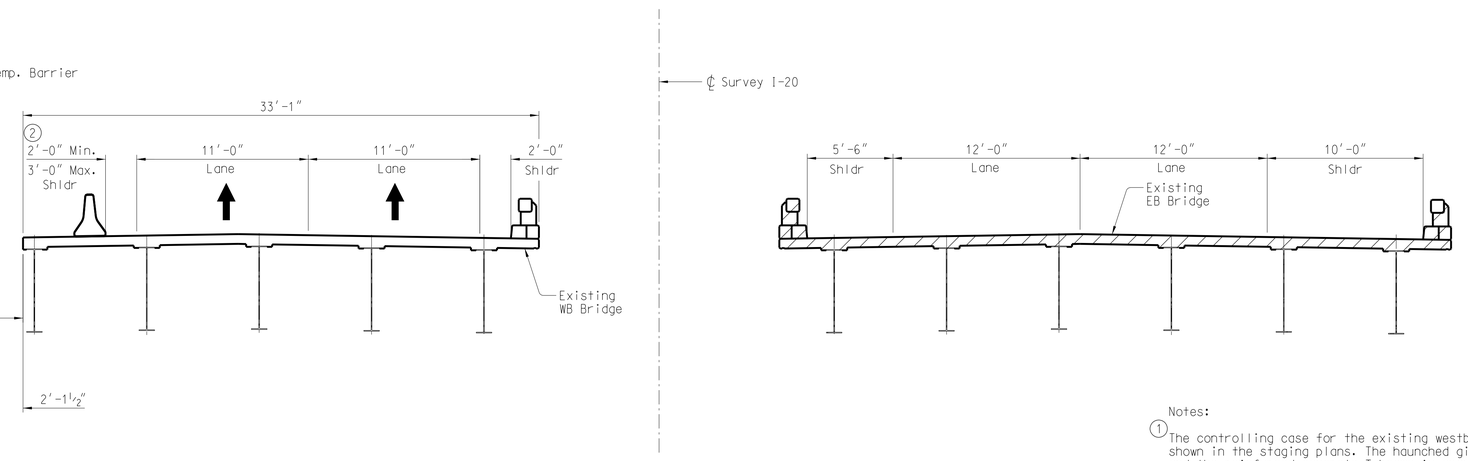

STAGE 2

Build Staged Section of New Westbound Bridge,
then shift Westbound traffic to new Staged Section.

Shift Eastbound Traffic to Existing Westbound Bridge,
then Remove Eastbound Bridge.

Notes:

1. The controlling case for the existing westbound bridge cut location is shown in the staging plans. The haunched girders in continuous span 5 and the reinforced concrete T-beams in spans 9-18 were also evaluated and overhangs from the beam/girder centerline are less than 2'-10".

   In addition, the existing substructure was evaluated to ensure retained beam seats are not cut and that the overhang from the retained pile centerline is less than 1'-6".

2. Maximum 3'-0" shoulder can be met for spans 1-8. T beams in spans 9-18 will require field verification of fit up with temporary anchored barrier, barrier at these locations may need to be moved a few inches inside while still maintaing a 2'-0" min. shoulder.

SOUTH CAROLINA
RUMMEL KLEPPER & KAHL LLP
No. 334
CERTIFICATE OF AUTHORIZATION

REV.			
REV.			
REV.			
REVIEWED			
QUAN.			
DR.	KSH	LKA	12-22
DES.			
	BY	CHK.	DATE

CROWDER 75 1947 2022 — 100 years RK&K

SOUTH CAROLINA
DEPARTMENT OF TRANSPORTATION

BRIDGE STAGING
(SHEET 1 of 3)

COUNTY	ROUTE
KERSHAW	I-20

2/7/2023 1:06:48 PM

Wateree_br_staging.dgn

CONTRACT ID	SHEET NO.
2847360	9

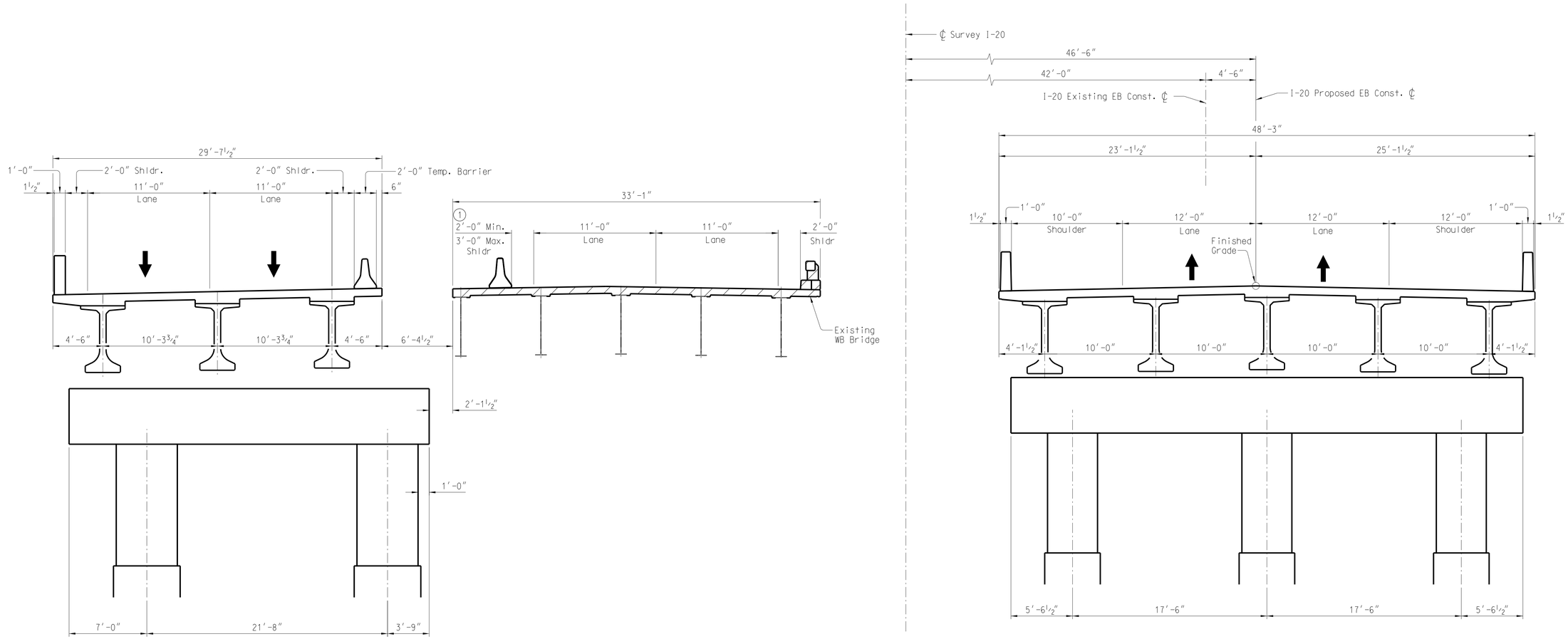

STAGE 3

Construct New Eastbound Bridge
Shift Eastbound Traffic to New Bridge
Remove Remaining Portion of Westbound Bridge

1 Maximum 3'-0" shoulder can be met for spans 1-9. T beams in spans 9-18 will require field verification of fit up with temporary anchored barrier, barrier at these locations may need to be moved a few inches inside while still maintaing a 2'-0" min. shoulder.

SOUTH CAROLINA DEPARTMENT OF TRANSPORTATION

BRIDGE STAGING
(SHEET 2 of 3)

REV.			
REV.			
REV.			
REVIEWED			
QUAN.			
DR.	KSH	LKA	12-22
DES.			
	BY	CHK.	DATE

COUNTY	ROUTE
KERSHAW	I-20

SOUTH CAROLINA RUMMEL KLEPPER & KAHL LLP No. 334 CERTIFICATE OF AUTHORIZATION

2/7/2023 1:07:35 PM

Wateree_br_staging.dgn

CONTRACT ID	SHEET NO.
2847360	10

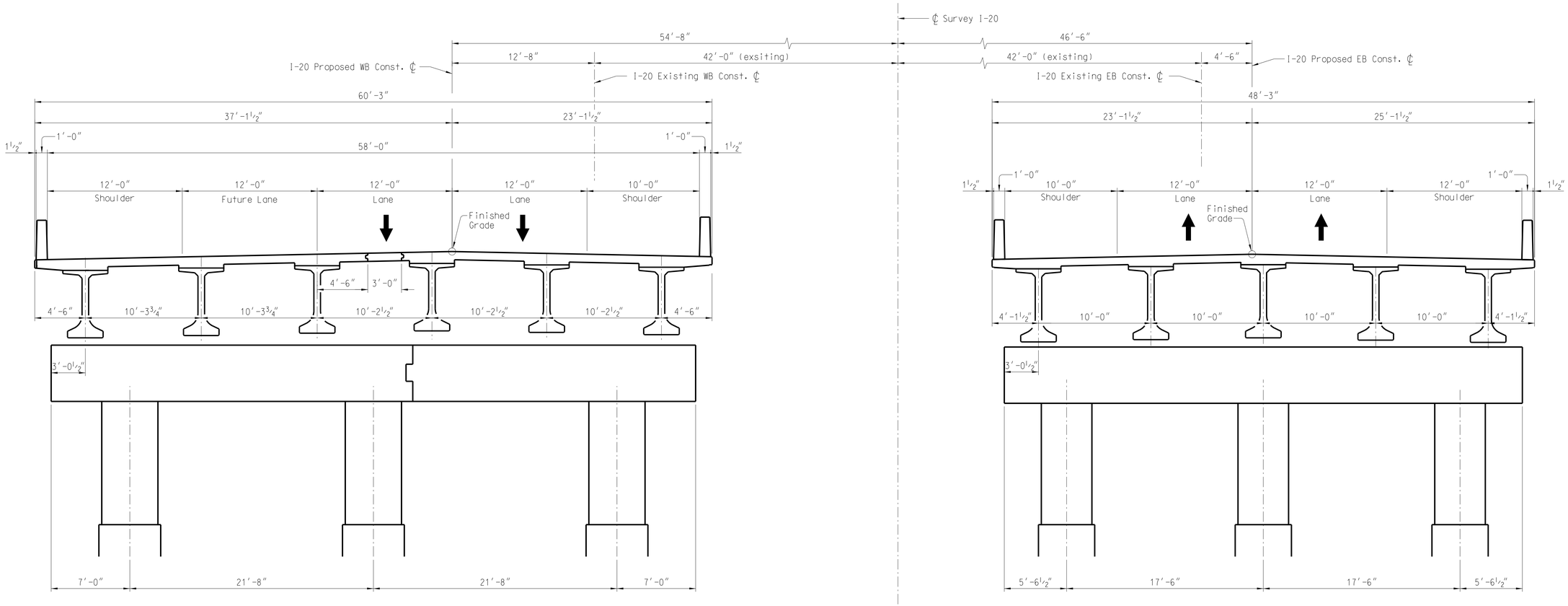

STAGE 4

Construct Rest of New Westbound Bridge
Shift Traffic to Final Configuration

SOUTH CAROLINA
RUMMEL KLEPPER & KAHL LLP
No. 334
CERTIFICATE OF AUTHORIZATION

REV.			
REV.			
REV.			
REVIEWED			
QUAN.			
DR.	KSH	LKA	12-22
DES.			
	BY	CHK.	DATE

CROWDER 75 YEARS 1947 2022 · 100 years RK&K

SOUTH CAROLINA
DEPARTMENT OF TRANSPORTATION

BRIDGE STAGING
(SHEET 3 of 3)

COUNTY	ROUTE
KERSHAW	I-20

2/7/2023 1:08:17 PM

Wateree_eb.dgn

CONTRACT ID	SHEET NO.
2847360	11

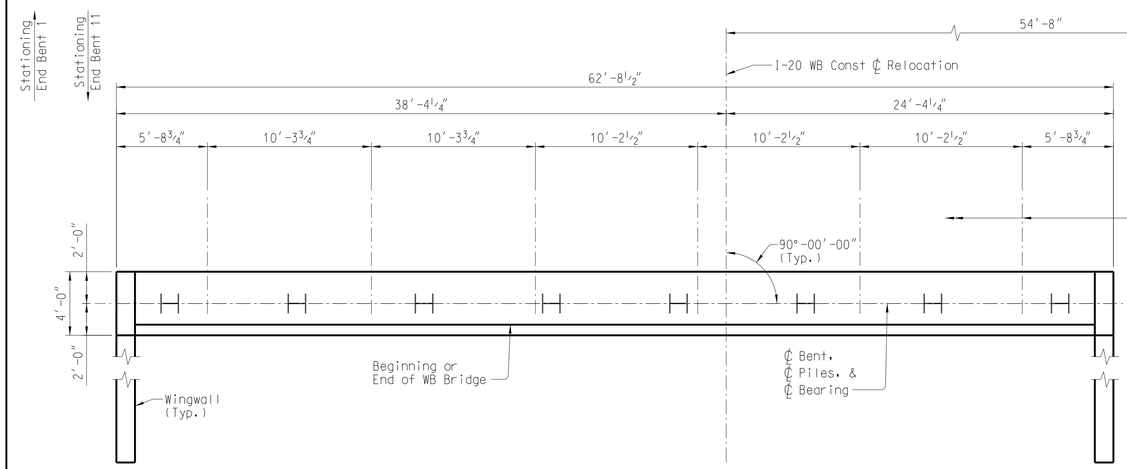

PLAN- WB BRIDGE

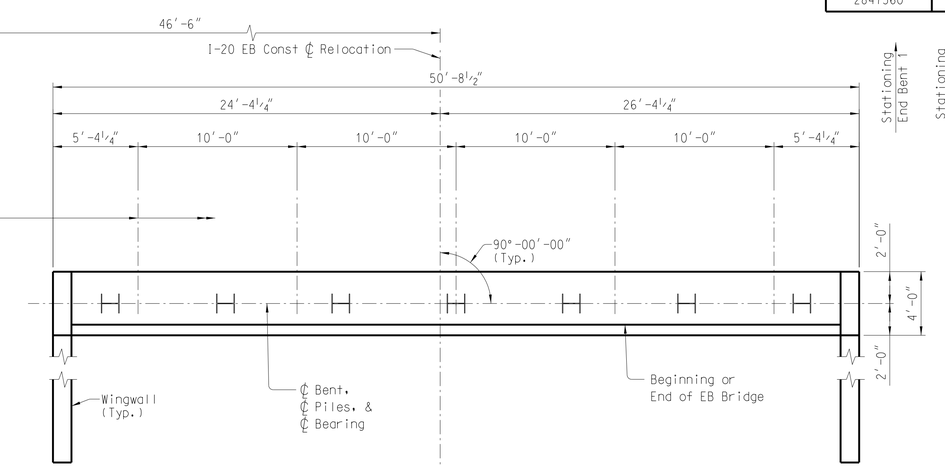

PLAN- EB BRIDGE

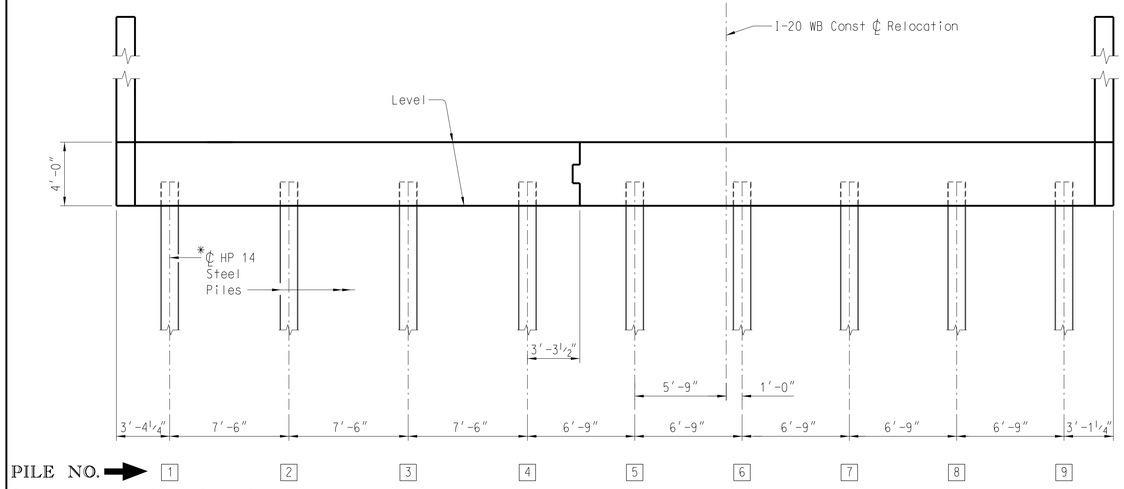

Piles are numbered from left to right looking in direction of stationing.

ELEVATION- WB BRIDGE

(Looking in direction of stationing - End Bent 1)
(Looking in opposite direction of stationing - End Bent 11)

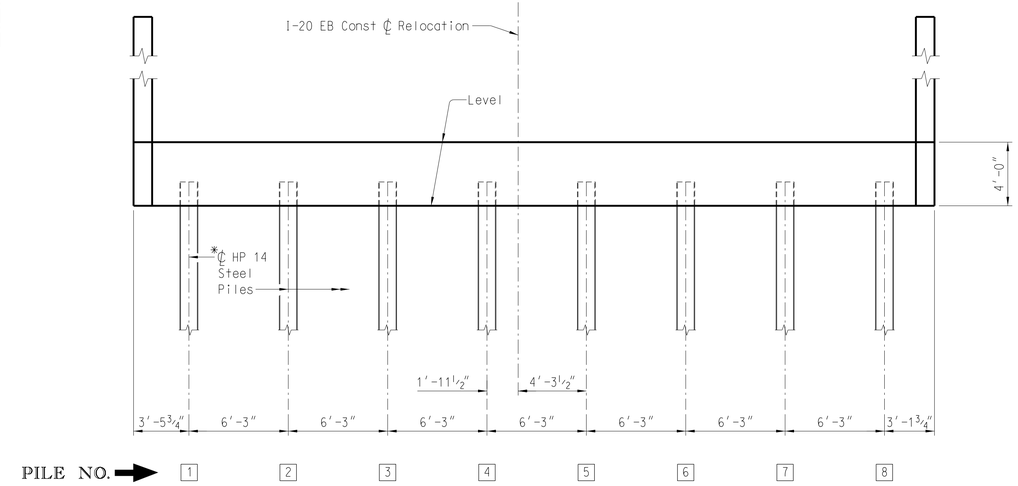

Piles are numbered from left to right looking in direction of stationing.

ELEVATION- EB BRIDGE

(Looking in direction of stationing - End Bent 1)
(Looking in opposite direction of stationing - End Bent 11)

*Foundation dependent upon Final Geotechnical Report

SOUTH CAROLINA RUMMEL KLEPPER & KAHL LLP No. 334 CERTIFICATE OF AUTHORIZATION

REV.			
REV.			
REV.			
REVIEWED			
QUAN.			
DR.	KSH	LKA	1-23
DES.			
	BY	CHK.	DATE

CROWDER 75 YEARS 1947 2022 — 100 years RK&K

SOUTH CAROLINA DEPARTMENT OF TRANSPORTATION

END BENTS 1 & 11

COUNTY	ROUTE
KERSHAW	I-20

2/7/2023 1:27:58 PM

Wateree_IB.dgn

CONTRACT ID	SHEET NO.
2847360	12

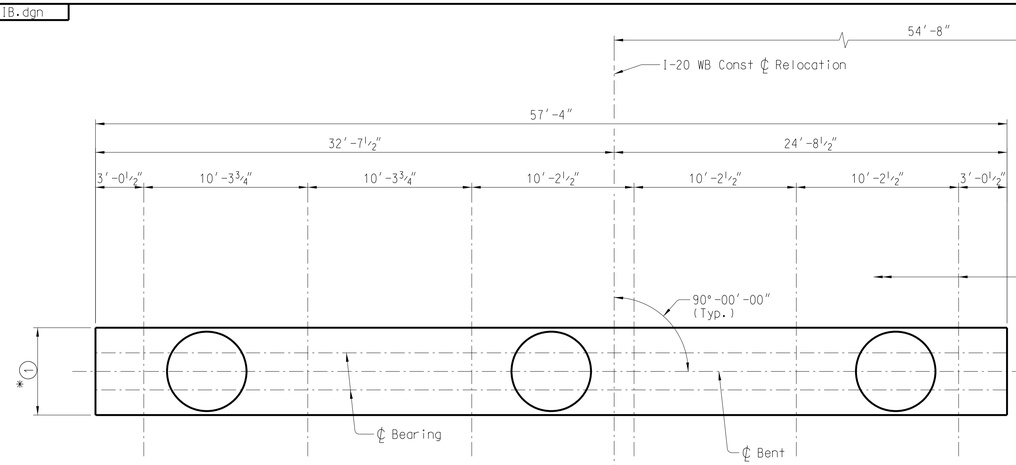

PLAN - WB BRIDGE

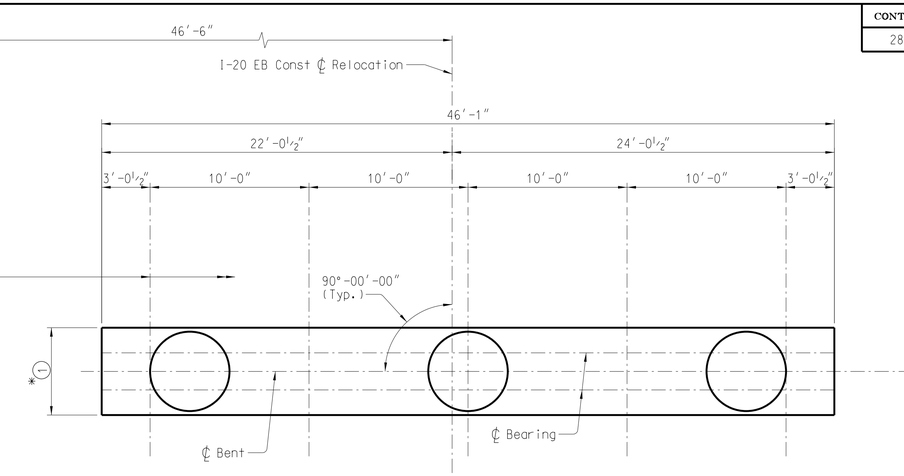

PLAN - EB BRIDGE

℄ Survey I-20

Stationing

℄ Prestressed Concrete Beams

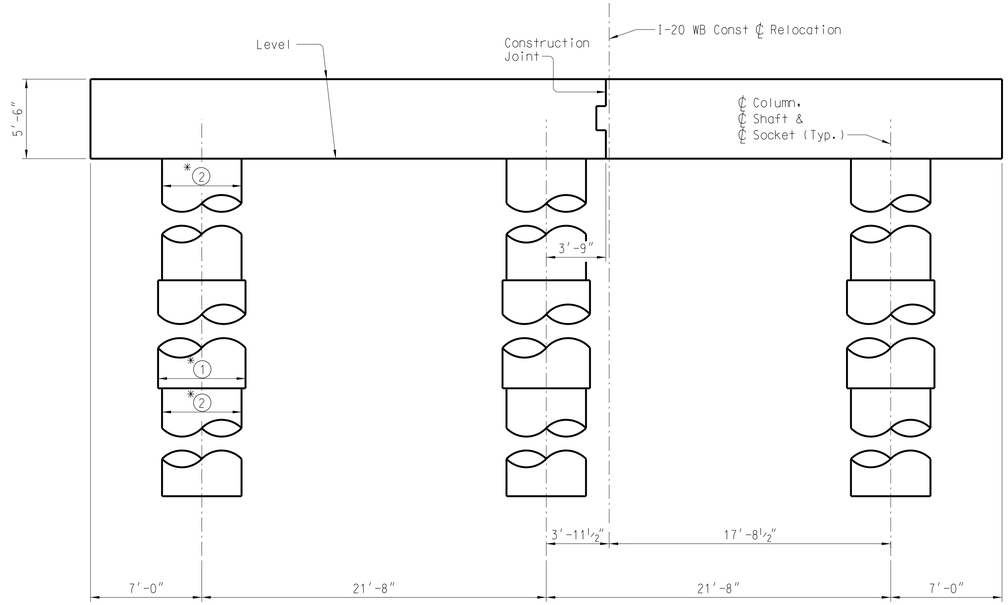

SHAFT NO. ➡ 1 2 3

Drilled shafts are numbered from left to right looking in direction of stationing.

ELEVATION - WB BRIDGE

(Looking in the direction of stationing)

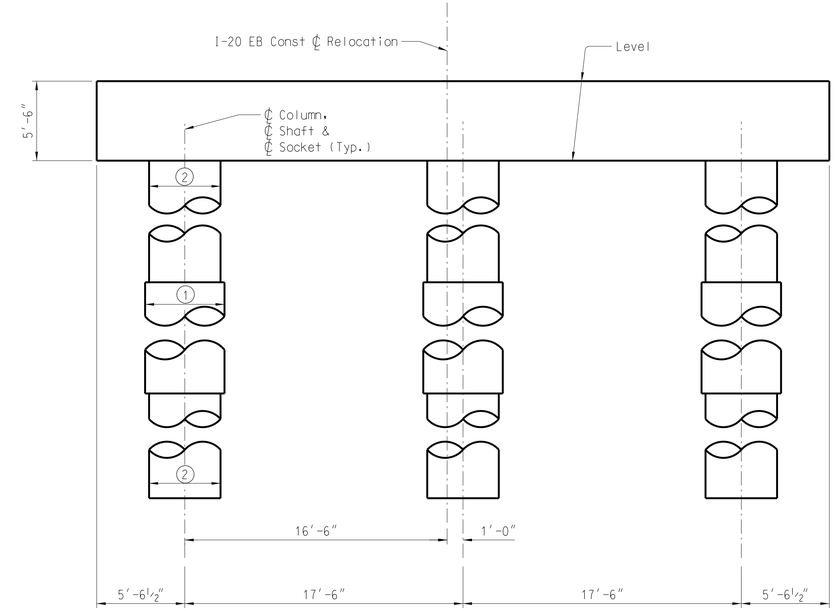

ELEVATION - EB BRIDGE

(Looking in the direction of stationing)

① Interior Bents 2, 3, 4, 7, 8, 9, and 10: 5'-0"
Interior Bents 5 and 6: 6'-0"

② Interior Bents 2, 3, 4, 7, 8, 9, and 10: 4'-6"
Interior Bents 5 and 6: 5'-6"

*Sizes dependent upon Final Geotechnical Report

STATE OF SOUTH CAROLINA
RUMMEL, KLEPPER & KAHL LLP
No. 334
CERTIFICATE OF AUTHORIZATION

REV.			
REV.			
REV.			
REVIEWED			
QUAN.			
DR.	KSH	LKA	1-23
DES.			
	BY	CHK.	DATE

CROWDER 75 YEARS 1947 2022 — RK&K 100 years

SOUTH CAROLINA
DEPARTMENT OF TRANSPORTATION

INTERIOR BENTS

COUNTY	ROUTE
KERSHAW	I-20

2/7/2023 1:42:49 PM

Wateree_typ.dgn

CONTRACT ID	SHEET NO.
2847360	13

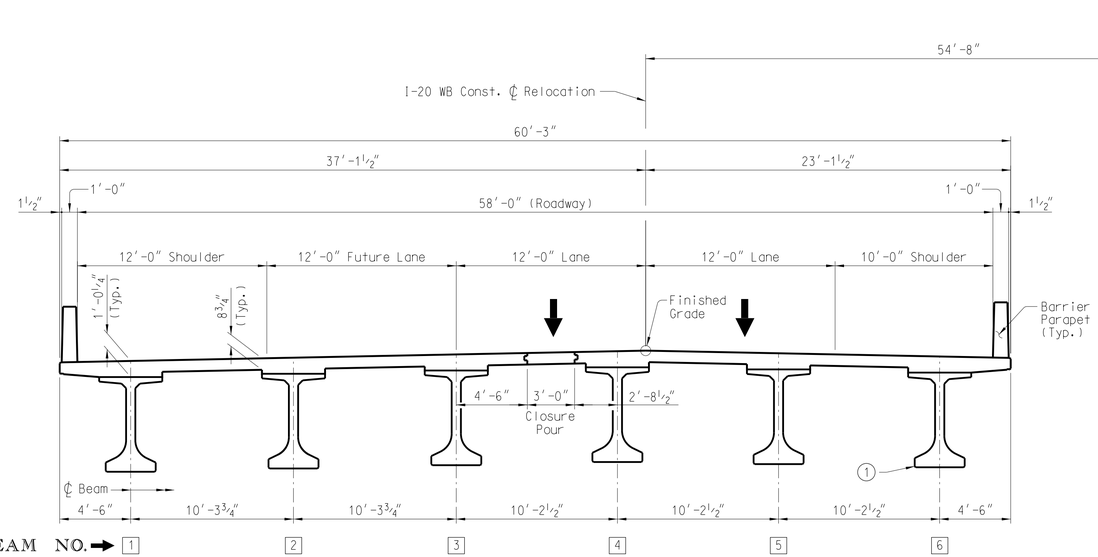

SUPERSTRUCTURE TYPICAL SECTION
WESTBOUND BRIDGE

(Looking in Direction of Stationing)

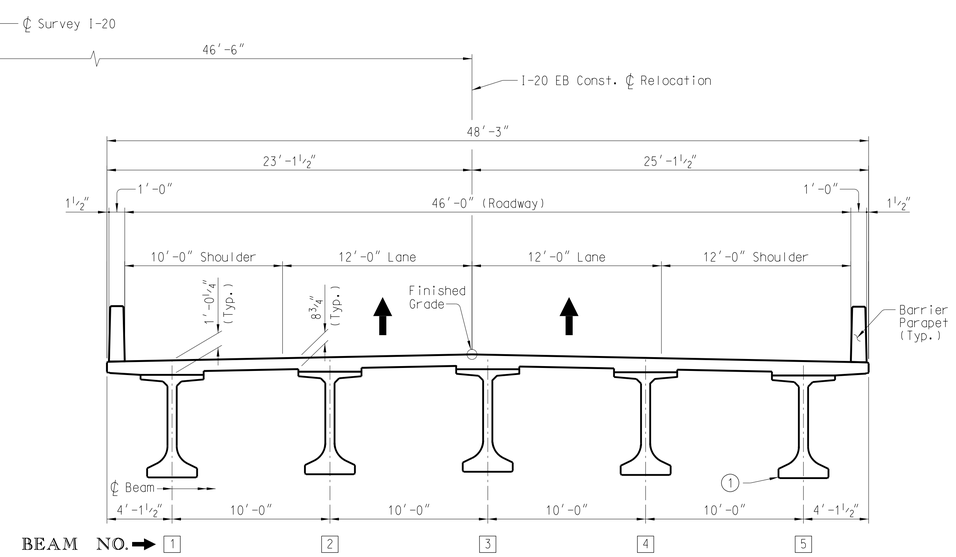

SUPERSTRUCTURE TYPICAL SECTION
EASTBOUND BRIDGE

(Looking in Direction of Stationing)

1 Spans 1-3: 63" Florida I-Beam
Spans 4-8: 84" Florida I-Beam
Spans 9-10: 72" Florida I-Beam

STATE OF SOUTH CAROLINA
RUMMEL KLEPPER & KAHL LLP
No. 334
CERTIFICATE OF AUTHORIZATION

REV.			
REV.			
REV.			
REVIEWED			
QUAN.			
DR.	KSH	LKA	1-23
DES.			
	BY	CHK.	DATE

CROWDER 75 YEARS 1947 2022

RK&K 100 years

SOUTH CAROLINA
DEPARTMENT OF TRANSPORTATION

SUPERSTRUCTURE
TYPICAL SECTION

COUNTY	ROUTE
KERSHAW	I-20

2/7/2023 1:43:52 PM

Wateree_ca.dgn

CONTRACT ID	SHEET NO.
2847360	14

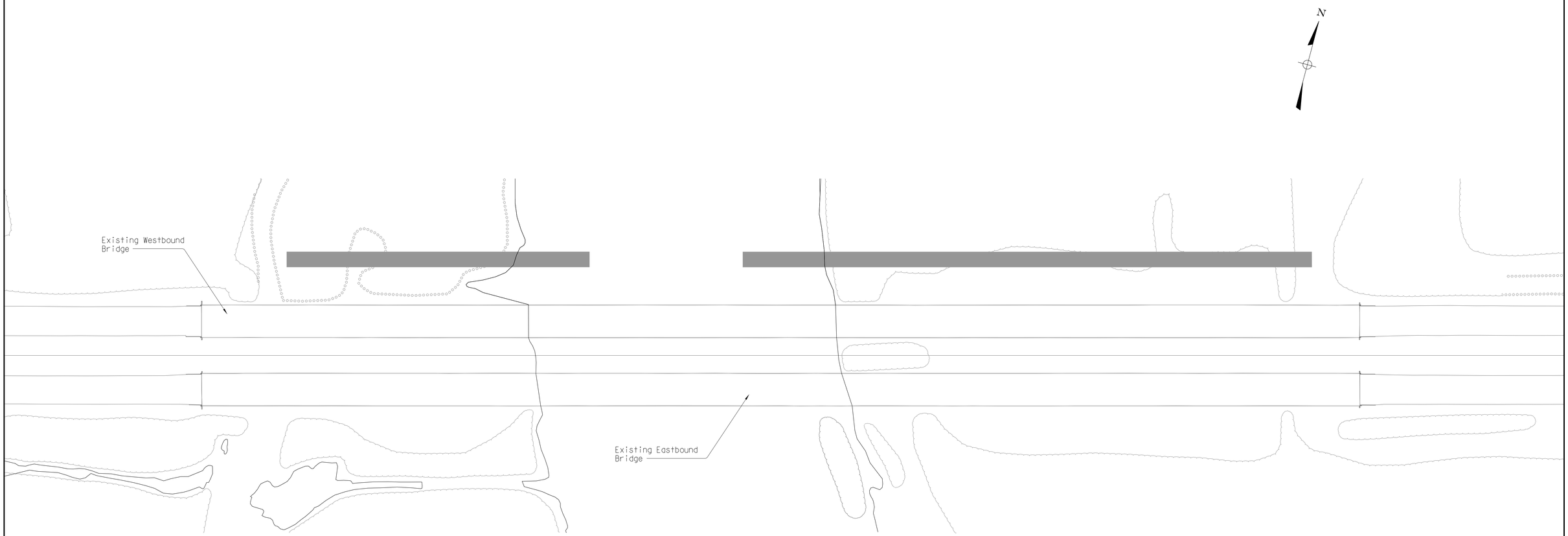

BRIDGE CONSTRUCTION ACCESS PLAN - STAGE 1

See MOT plans for additional information

Temporary Work Bridge/Trestle

STATE OF SOUTH CAROLINA
RUMMEL KLEPPER & KAHL LLP
No. 334
CERTIFICATE OF AUTHORIZATION

REV.			
REV.			
REV.			
REVIEWED			
QUAN.			
DR.	KSH	LKA	1-23
DES.			
	BY	CHK.	DATE

CROWDER 75 YEARS 1947 2022

RK&K 100 years

SOUTH CAROLINA
DEPARTMENT OF TRANSPORTATION

BRIDGE CONSTRUCTION
ACCESS PLAN
(STAGE 1)

COUNTY	ROUTE
KERSHAW	I-20

2/8/2023 12:00:55 AM

Wateree_ca.dgn

CONTRACT ID	SHEET NO.
2847360	15

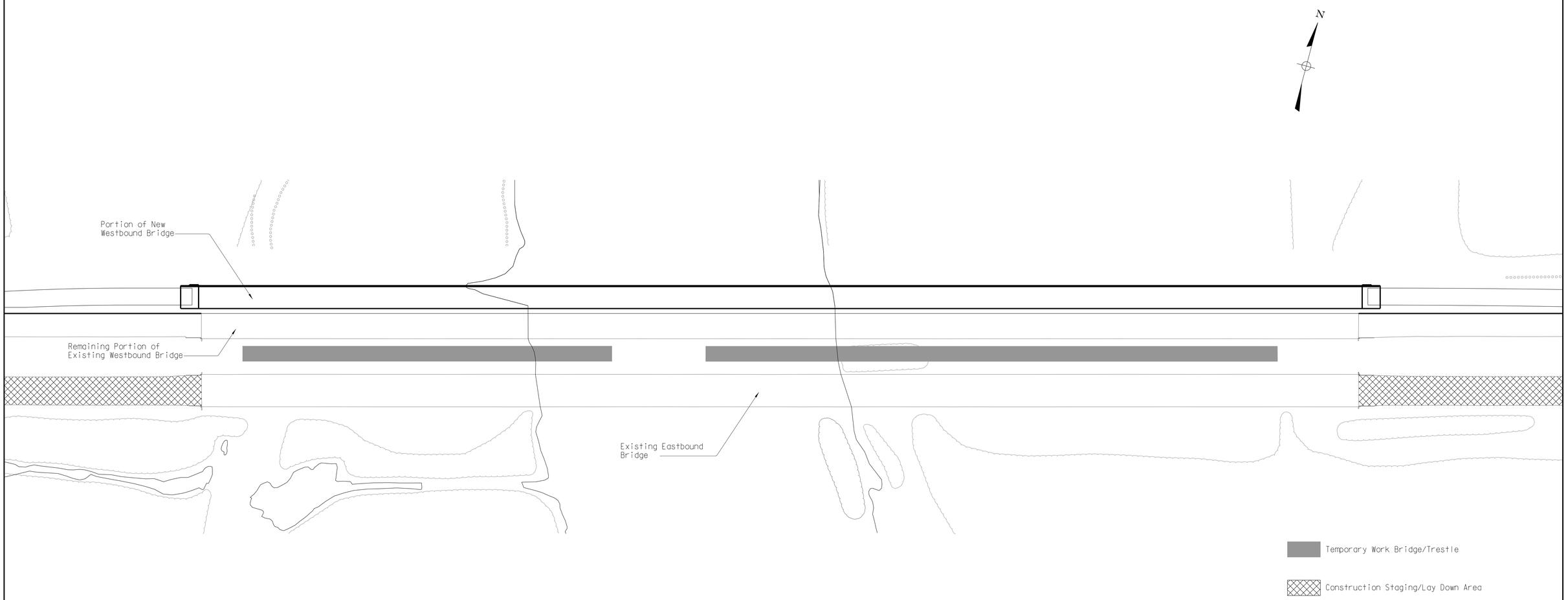

BRIDGE CONSTRUCTION ACCESS PLAN - STAGE 2

See MOT plans for additional information

SOUTH CAROLINA RUMMEL, KLEPPER & KAHL LLP No. 334 CERTIFICATE OF AUTHORIZATION

REV.			
REV.			
REV.			
REVIEWED			
QUAN.			
DR.	KSH	LKA	1-23
DES.			
	BY	CHK.	DATE

CROWDER 75 1947 2022 · RK&K 100 years

SOUTH CAROLINA DEPARTMENT OF TRANSPORTATION

BRIDGE CONSTRUCTION ACCESS PLAN (STAGE 2)

COUNTY	ROUTE
KERSHAW	I-20

2/8/2023 12:02:49 AM

Wateree_ca.dgn

CONTRACT ID	SHEET NO.
2847360	16

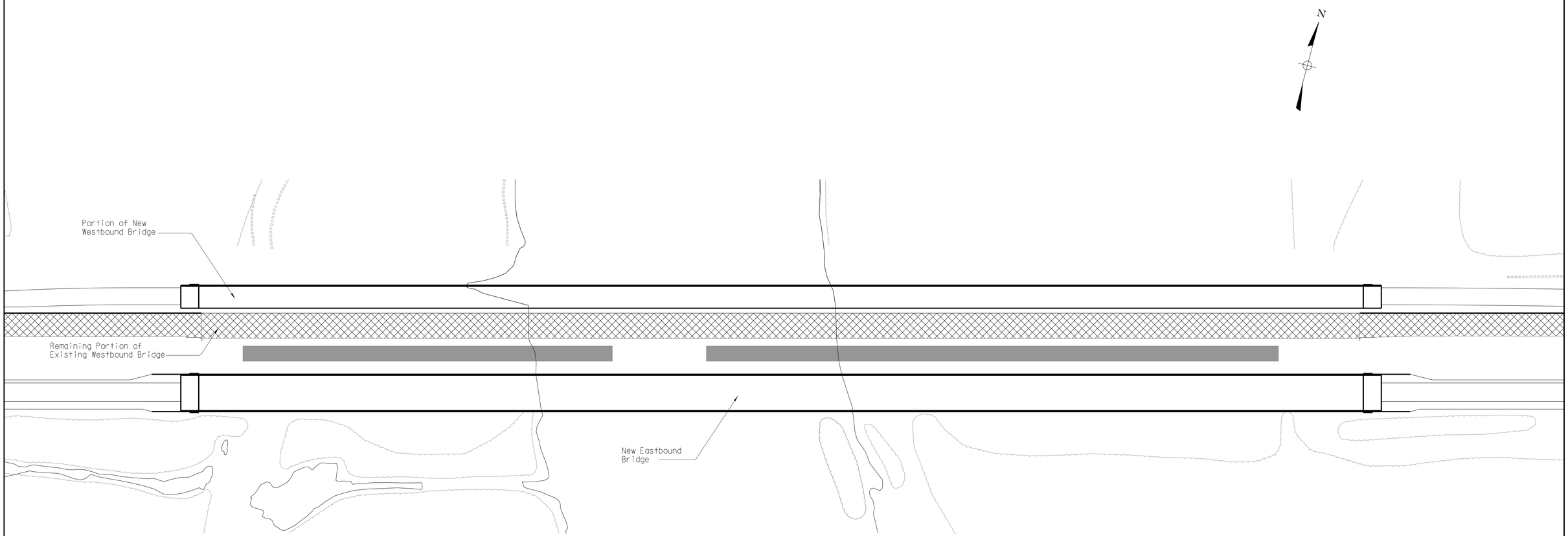

BRIDGE CONSTRUCTION ACCESS PLAN - STAGE 3 & 4

See MOT plans for additional information

Temporary Work Bridge/Trestle

Construction Staging/Lay Down Area

SOUTH CAROLINA RUMMEL KLEPPER & KAHL LLP No. 334 CERTIFICATE OF AUTHORIZATION

REV.			
REV.			
REV.			
REVIEWED			
QUAN.			
DR.	KSH	LKA	1-23
DES.			
	BY	CHK.	DATE

CROWDER 1947 2022 75 years

RK&K 100 years

SOUTH CAROLINA DEPARTMENT OF TRANSPORTATION

BRIDGE CONSTRUCTION ACCESS PLAN (STAGE 3 & 4)

COUNTY	ROUTE
KERSHAW	I-20

2/8/2023 10:35:39 PM

Wateree_ft_typ.dgn

CONTRACT ID	SHEET NO.
2847360	17

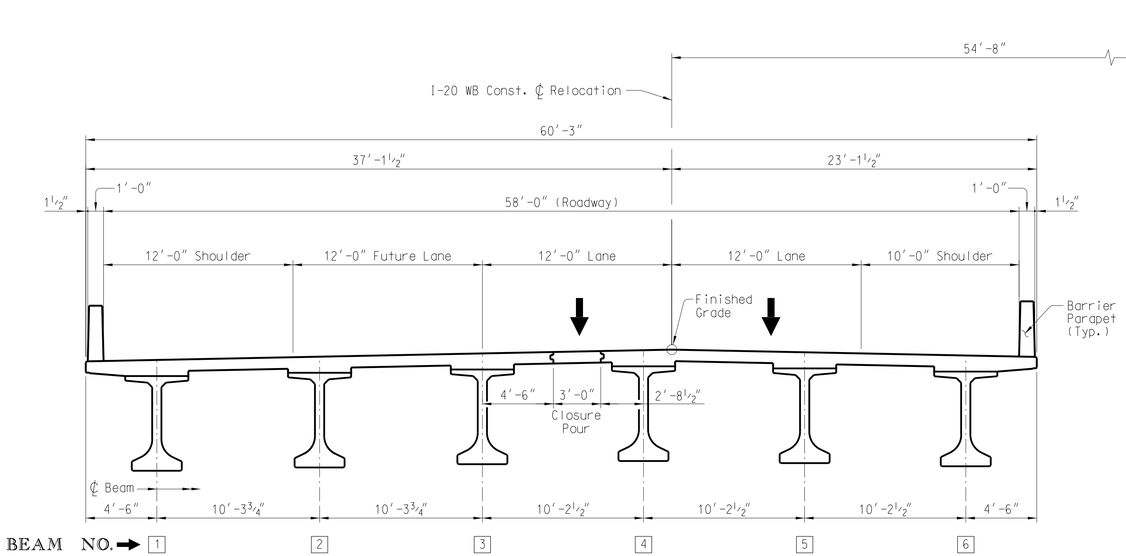

SUPERSTRUCTURE TYPICAL SECTION

WESTBOUND BRIDGE

(Looking in Direction of Stationing)

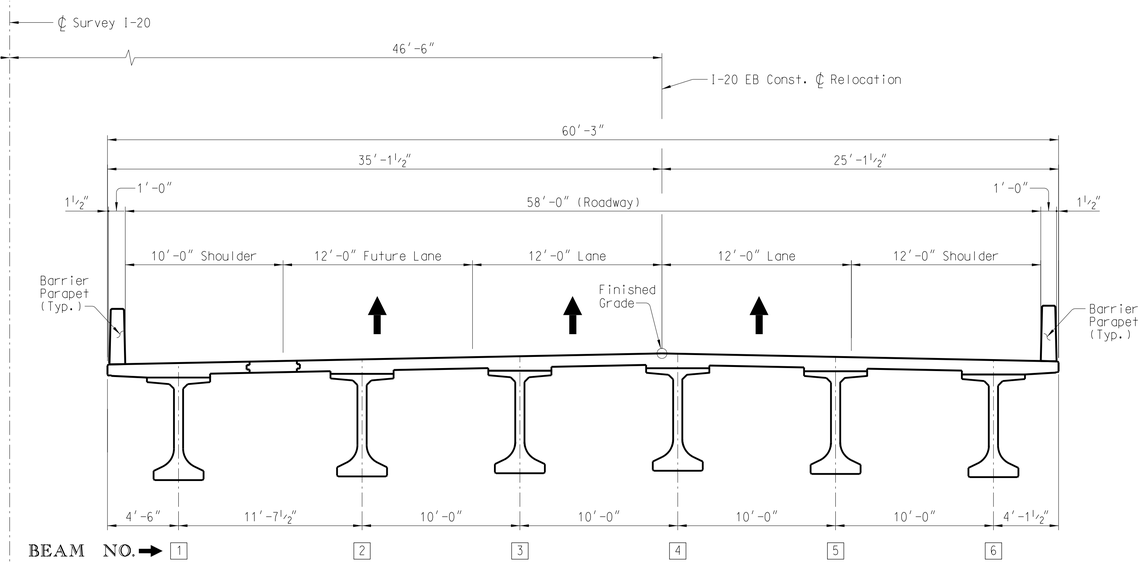

FUTURE SUPERSTRUCTURE TYPICAL SECTION

EASTBOUND BRIDGE

(Looking in Direction of Stationing)

REV.			
REV.			
REV.			
REVIEWED			
QUAN.			
DR.	KSH	LKA	1-23
DES.			
	BY	CHK.	DATE

SOUTH CAROLINA DEPARTMENT OF TRANSPORTATION

FUTURE TYPICAL SECTION

COUNTY	ROUTE
KERSHAW	I-20

2/7/2023 11:50:36 PM

A.4 - CPM Schedule

Activity ID	Activity Name	Original Duration	Start	Finish	Total Float
DB I-20 Wateree Bridge		1247	Feb-09-23 A	Sep-06-28	0
A1420	Tech Proposal Due Date	0	Feb-09-23 A		
A1430	Cost Proposal Due Date	0	Mar-28-23 A		
A1440	Notice of Award	0	Mar-29-23*		0
A1470	Insurance and Bond Certificate 2023	0	Mar-31-23*		0
A1450	Contract Award Date (Anticipated)	0	Apr-28-23*		0
A1460	Baseline CPM Schedule	25	Apr-28-23	Jun-02-23	5
A1300	NTP(45 CD from Award Date)	0	Jun-12-23*		0
A1550	Mobilization & Laydown/Staging Areas	30	Jun-12-23	Jul-25-23	94
A1490	Insurance and Bond Certificate 2024	0	Apr-01-24*		0
A1500	Insurance and Bond Certificate 2025	0	Mar-31-25*		0
A1630	Insurance and Bond Certificate 2026	0	Mar-31-26*		0
A1650	Insurance and Bond Certificate 2027	0	Mar-31-27*		0
A1510	Substantial Completion(1734 CD from NTP)	0		Mar-10-28*	0
A1540	Demobilization	30	Mar-10-28	Apr-21-28	95
A1520	As builts,CPM, Plans and Final Doc's	180	Mar-11-28	Sep-06-28	0
A1530	Punchlist	180	Mar-11-28	Sep-06-28	0
A1640	Insurance and Bond Certificate 2028	0	Mar-31-28*		0
A1560	Final Completion (180 days from Substantial Completion)	0		Sep-06-28	0
Design & Submittals		215	Mar-29-23	Mar-06-24	1032
Design		177	Mar-29-23	Jan-07-24	1070
Project Info Submittals		21	Mar-29-23	Apr-26-23	0
A3190	Project Info Submittal RKK	0	Mar-29-23		0
A3200	Project Info Review SCDOT	15	Mar-29-23	Apr-18-23	0
A3210	Respond to Comments RKK	5	Apr-19-23	Apr-25-23	0
A3220	Approval SCDOT	1	Apr-26-23	Apr-26-23	0
Prelim Roadway/Bridge & Bridge Rehab Submittals		25	Apr-27-23	Jun-01-23	0
A3230	Prelim Rehab Submittal RKK	0	Apr-27-23		0
A3240	Review Rehab Submittal SCDOT	15	Apr-27-23	May-17-23	0
A3250	Respond to Comments RKK	5	May-18-23	May-24-23	0
A3260	Approval SCDOT	5	May-25-23	Jun-01-23	0
Final Bridge Rehab ROW Submittals		26	Jun-02-23	Jul-11-23	0
A3270	Final Rehab Submittal RKK	1	Jun-02-23	Jun-02-23	0
A3280	Review Final Rehab Submittal SCDOT	15	Jun-05-23	Jun-26-23	0
A3290	Respond to Comments RKK	5	Jun-27-23	Jul-03-23	0
A3300	Approval SCDOT	5	Jul-05-23	Jul-11-23	0
Final Roadway Submittals		32	Jul-12-23	Aug-24-23	72
A3330	Final Roadway Submittal RKK	7	Jul-12-23	Jul-20-23	72
A3340	Review Final Roadway Submittal SCDOT	15	Jul-21-23	Aug-10-23	72
A3350	Respond to Comments RKK	5	Aug-11-23	Aug-17-23	72
A3360	Approval SCDOT	5	Aug-18-23	Aug-24-23	72
Final Bridge Substruct Submittals		28	Aug-25-23	Oct-04-23	92
A3370	Final Bridge Sub Submittal RKK	3	Aug-25-23	Aug-29-23	92
A3380	Review Final Bridge Sub Submittal SCDOT	15	Aug-30-23	Sep-20-23	92
A3390	Respond to Comments RKK	5	Sep-21-23	Sep-27-23	92
A3400	Approval SCDOT	5	Sep-28-23	Oct-04-23	92
Final Bridge Superstruct Submittals		28	Oct-05-23	Nov-15-23	223
A3410	Final Bridge Super Submittal RKK	3	Oct-05-23	Oct-10-23	223
A3420	Review Final Bridge Super Submittal SCDOT	15	Oct-11-23	Oct-31-23	223
A3430	Respond to Comments RKK	5	Nov-01-23	Nov-07-23	223
A3440	Approval SCDOT	5	Nov-08-23	Nov-15-23	223
RFC Drawings		88	Jul-12-23	Nov-16-23	992
A3310	RFC Drawing Bridge/Roadway Rehab	0	Jul-12-23		1080
A1700	RFC Roadway Drawings	0	Aug-25-23		72

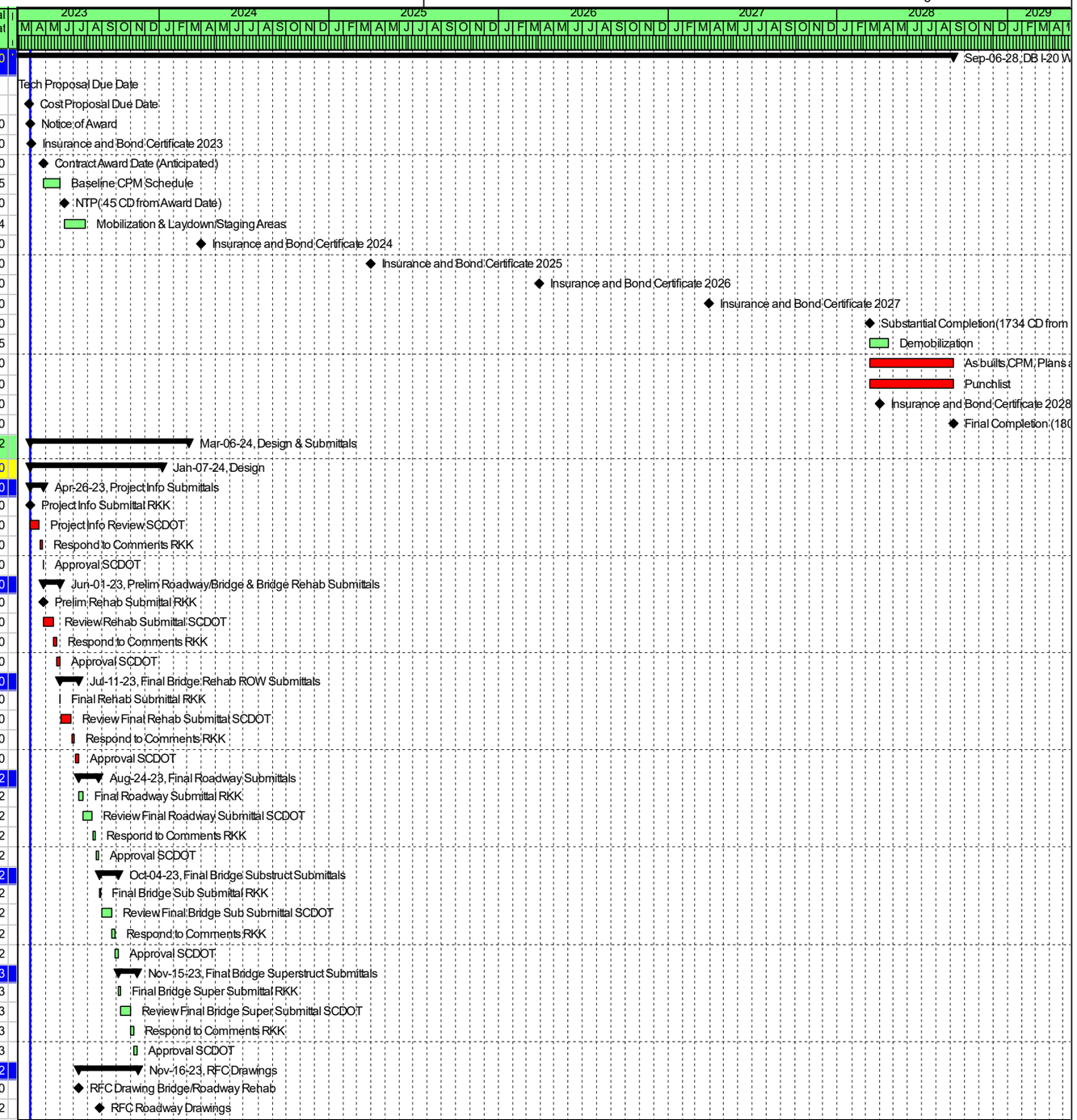

Remaining Level of Effort
Actual Level of Effort
Actual Work
Remaining Work
Critical Remaining Work
Milestone
Summary

CROWDER CONSTRUCTION Sr. Project Manager Kier Ouderkirk 704-995-4750

Activity ID	Activity Name	Original Duration	Start	Finish	Total Float
A1680	RFC Sub Structure Drawings	0	Oct-05-23		92
A1690	RFC Super Structure Drawings	0	Nov-16-23		223
Permitting/Utiltiy/ROW Acquistion		285	Mar-29-23	Jan-07-24	1704
A3470	NEPA Permit Submittal/Approval	150	Mar-29-23	Aug-25-23	1839
A3450	ROW Acqusitions	180	Jul-12-23	Jan-07-24	1704
A3460	Utility Coordination	180	Jul-12-23	Jan-07-24	1704
A3480	USACE Permit Submittal/Approval	150	Jul-12-23	Dec-08-23	0
A3490	FEMA Permit Submittal/Approval	30	Aug-25-23	Sep-23-23	1810
Submittals		183	Jun-12-23	Mar-06-24	1137
A1290	Material and Shop Drawing Submittals for Bridge Rehabilitation	25	Jun-12-23	Jul-18-23	1047
A1670	Precast Concrete Girders Shop Drawings and Approval	75	Nov-16-23	Mar-06-24	311
A1710	Bridge Joints	50	Nov-16-23	Jan-30-24	1162
Procurement		384	Jul-19-23	Mar-21-25	594
A1310	Bridge Rehabilitation Materials	25	Jul-19-23	Aug-25-23	953
A1480	WB Precast Concrete Girders	120	Mar-07-24	Sep-10-24	285
A1660	EB Precast Concrete Girders	120	Sep-11-24	Mar-21-25	285
Stage 1		161	Aug-25-23	May-08-24	991
Roadway S1		161	Aug-25-23	May-08-24	991
A1730	Installl Advance Warning Signs EB & WB	2	Aug-25-23	Aug-28-23	66
A1740	Excavate and Install Temp Median Shoulder Widenings	5	Dec-08-23	Dec-15-23	2
A2730	Clear & Grub Site	25	Dec-08-23	Jan-19-24	0
A1750	*****Traffic Switch WB to Median Side of Bridge	1	Dec-15-23	Dec-18-23	1048
A1780	Excavate and Install WB Decel/Accell Lane for Access	18	Dec-15-23	Jan-17-24	2
A1760	Install Temp Concrete Traffic Barrier Protecting & Attenuators	2	Dec-18-23	Dec-21-23	1048
A1790	Install Access to WB Substructure	20	Jan-19-24	Feb-20-24	0
A2270	Install Trestle Access to Bent 5 & 6	20	Feb-20-24	Mar-22-24	60
A1770	Demo Outside Portion of WB Bridge Deck	30	Mar-22-24	May-08-24	991
Stage 2		333	Feb-20-24	Aug-01-25	708
Roadway S2		313	Mar-22-24	Aug-01-25	708
A2180	Install Temp Bridge	30	Mar-22-24	May-08-24	135
A2190	Grade Median For Temp Temp Crossovers	30	May-08-24	Jun-25-24	135
A2200	Grade Approaches for New WB Bridge	30	Jun-25-24	Aug-12-24	135
A2210	Asphalt Pave Median for Temp CrossOvers	10	Jun-25-24	Jul-10-24	951
A2220	Asphalt Pave Approaches for New WB Bridge	10	Aug-12-24	Aug-27-24	135
A2290	Remove Trestle for WB	12	Mar-07-25	Mar-27-25	36
A2230	Tie In New WestBound Approach Slabs/Guardrail and Pavement Markings	10	Apr-01-25	Apr-16-25	0
A2240	Install Temp Concrete Protective Barrier on New WB Bridge	2	Apr-16-25	Apr-21-25	0
A2250	*****Switch Existing WB Trafffic onto new WB Bridge	2	Apr-21-25	Apr-23-25	0
A2260	*****Switch Existing EB on to Temp Bridge and Existing WB Bridge	4	Apr-23-25	Apr-29-25	0
A2280	Demo Existing EB Bridge	60	Apr-29-25	Aug-01-25	0
Bridge S2 WB		260	Feb-20-24	Apr-08-25	781
Sub Structure S2 WB		145	Feb-20-24	Oct-04-24	0
A1800	Drill Shafts 1 & 2 Bent 10	20	Feb-20-24	Mar-22-24	0
A1880	Drill Shafts 1 & 2 Bent 2	20	Feb-20-24	Mar-22-24	20
A2090	Drive Pile End Bent 1	5	Feb-20-24	Feb-27-24	120
A2070	FRP Cap Bent 1	15	Feb-27-24	Mar-22-24	125
A2100	Drive Pile End Bent 11	5	Feb-27-24	Mar-07-24	120
A2080	FRP Cap Bent 11	15	Mar-07-24	Mar-29-24	120
A1810	Drill Shafts 1 & 2 Bent 9	20	Mar-22-24	Apr-22-24	0
A1870	Drill Shafts 1 & 2 Bent 3	20	Mar-22-24	Apr-22-24	20
A1890	FRP Columns 1 & 2 Bent 10	20	Mar-22-24	Apr-22-24	90
A1970	FRP Columns 1 & 2 Bent 2	20	Mar-22-24	Apr-22-24	90
A1820	Drill Shafts 1 & 2 Bent 8	20	Apr-22-24	May-23-24	0

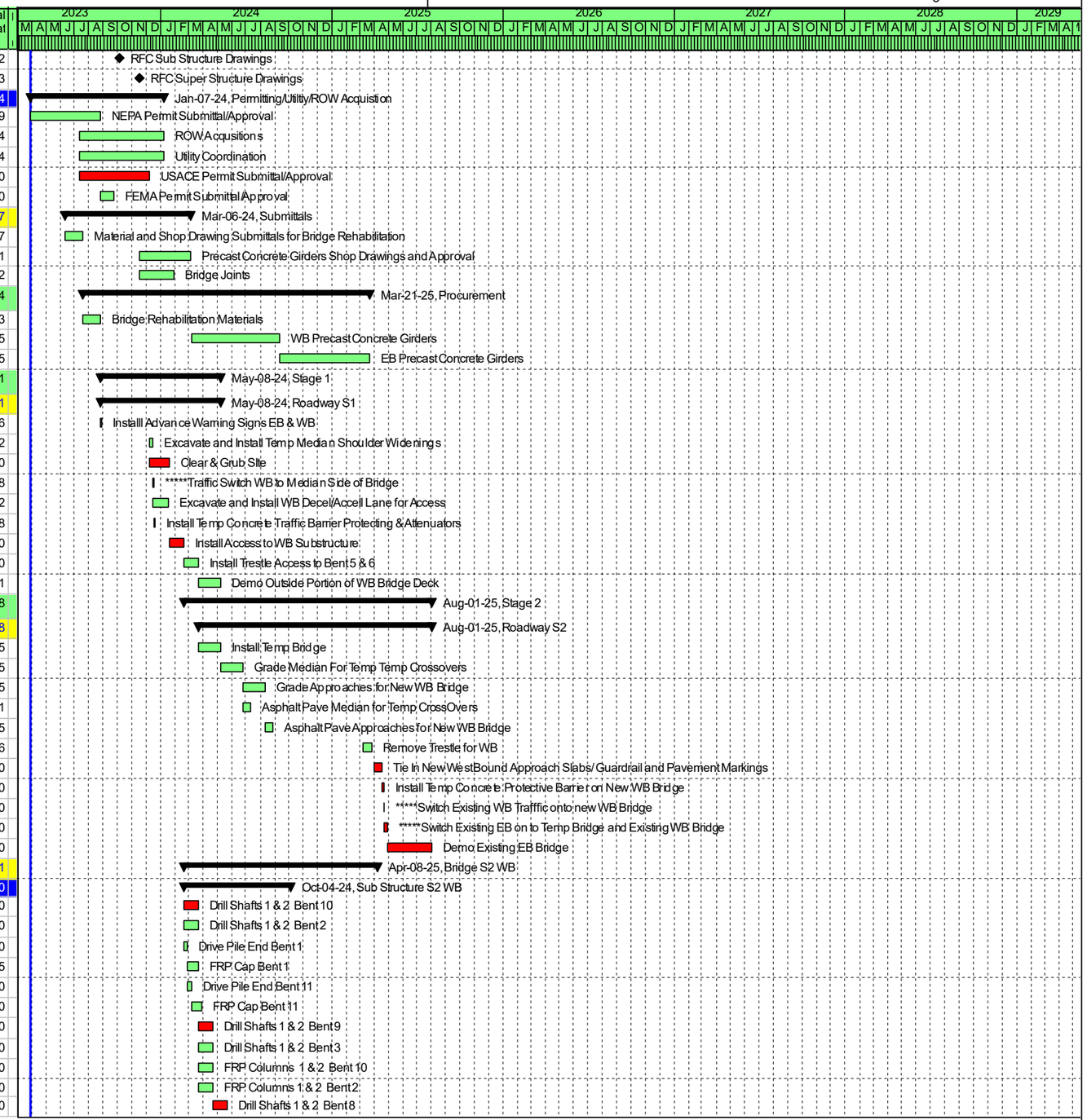

Remaining Level of Effort
Actual Level of Effort
Actual Work
Remaining Work
Critical Remaining Work
Milestone
Summary

CROWDER CONSTRUCTION Sr. Project Manager Kier Ouderkirk 704-995-4750

Activity ID	Activity Name	Original Duration	Start	Finish	Total Float
A1860	Drill Shafts 1 & 2 Bent 4	20	Apr-22-24	May-23-24	20
A1900	FRP Columns 1 & 2 Bent 9	20	Apr-22-24	May-23-24	70
A1960	FRP Columns 1 & 2 Bent 3	20	Apr-22-24	May-23-24	70
A1980	FRP Cap Bent 10	15	Apr-22-24	May-16-24	90
A2060	FRP Cap Bent 2	15	Apr-22-24	May-16-24	90
A1830	Drill Shafts 1 & 2 Bent 7	20	May-23-24	Jun-25-24	0
A1850	Drill Shafts 1 & 2 Bent 5 Water	25	May-23-24	Jul-02-24	20
A1910	FRP Columns 1 & 2 Bent 8	20	May-23-24	Jun-25-24	50
A1950	FRP Columns 1 & 2 Bent 4	20	May-23-24	Jun-25-24	50
A1990	FRP Cap Bent 9	15	May-23-24	Jun-18-24	70
A2050	FRP Cap Bent 3	15	May-23-24	Jun-18-24	70
A1840	Drill Shafts 1 & 2 Bent 6 Water	25	Jun-25-24	Aug-02-24	0
A1920	FRP Columns 1 & 2 Bent 7	20	Jun-25-24	Jul-26-24	30
A2000	FRP Cap Bent 8	15	Jun-25-24	Jul-18-24	50
A2040	FRP Cap Bent 4	15	Jun-25-24	Jul-18-24	50
A1940	FRP Columns 1 & 2 Bent 5 Water	20	Jul-02-24	Aug-02-24	20
A2010	FRP Cap Bent 7	15	Jul-26-24	Aug-19-24	30
A1930	FRP Columns 1 & 2 Bent 6 Water	20	Aug-02-24	Sep-04-24	0
A2030	FRP Cap Bent 5 Water	20	Aug-02-24	Sep-04-24	20
A2020	FRP Cap Bent 6 Water	20	Sep-04-24	Oct-04-24	0
Superstructure S2 WB		**115**	**Oct-04-24**	**Apr-08-25**	**781**
A2110	Set Beams Span 1 thru 10 (3 each)	35	Oct-04-24	Dec-02-24	0
A2120	Install SIP's	35	Oct-21-24	Dec-18-24	0
A2130	Edge Forms and Overhangs	40	Oct-28-24	Jan-06-25	0
A2140	Install Rebar	50	Nov-13-24	Feb-05-25	0
A2150	Deck Pours Span 1thru 10	50	Dec-18-24	Mar-07-25	0
A2170	FRP Approach Slabs	15	Mar-07-25	Apr-01-25	0
A2160	FRP Bridge Barrier	5	Apr-01-25	Apr-08-25	781
Stage 3		**549**	**Aug-12-24**	**Jan-07-27**	**0**
Roadway S3 EB		**167**	**Aug-12-24**	**May-05-25**	**36**
A2300	Install Access to EB Substructure	20	Aug-12-24	Sep-11-24	146
A2310	Install Trestle to EB Substructure	25	Mar-27-25	May-05-25	36
Bridge S3 EB		**326**	**Aug-01-25**	**Jan-07-27**	**0**
Sub Structure S3 EB		**201**	**Aug-01-25**	**Jun-18-26**	**0**
A2330	Drill Shafts 1, 2, & 3 Bent 10	30	Aug-01-25	Sep-18-25	45
A2530	Drill Shafts 1, 2, & 3 Bent 2	30	Aug-01-25	Sep-18-25	0
A2320	Drive Pile End Bent 1	5	Aug-01-25	Aug-11-25	176
A2340	FRP Cap Bent 1	15	Aug-11-25	Sep-03-25	181
A2350	Drive Pile End Bent 11	5	Aug-11-25	Aug-18-25	176
A2380	FRP Cap Bent 11	15	Aug-18-25	Sep-10-25	176
A2360	Drill Shafts 1, 2, & 3 Bent 9	30	Sep-18-25	Nov-05-25	45
A2500	Drill Shafts 1, 2, & 3 Bent 3	30	Sep-18-25	Nov-05-25	0
A2370	FRP Columns 1, 2, & 3 Bent 10	21	Sep-18-25	Oct-21-25	135
A2600	FRP Columns 1, 2, & 3 Bent 2	21	Sep-18-25	Oct-21-25	135
A2420	FRP Cap Bent 10	15	Oct-21-25	Nov-13-25	135
A2620	FRP Cap Bent 2	15	Oct-21-25	Nov-13-25	135
A2390	Drill Shafts 1, 2, & 3 Bent 8	30	Nov-05-25	Dec-23-25	45
A2490	Drill Shafts 1, 2, & 3 Bent 4	30	Nov-05-25	Dec-23-25	0
A2410	FRP Columns 1, 2, & 3 Bent 9	21	Nov-05-25	Dec-09-25	105
A2580	FRP Columns 1, 2, & 3 Bent 3	21	Nov-05-25	Dec-09-25	105
A2450	FRP Cap Bent 9	15	Dec-09-25	Jan-06-26	105
A2610	FRP Cap Bent 3	15	Dec-09-25	Jan-06-26	105
A2400	Drill Shafts 1, 2, & 3 Bent 7	30	Dec-23-25	Feb-12-26	45

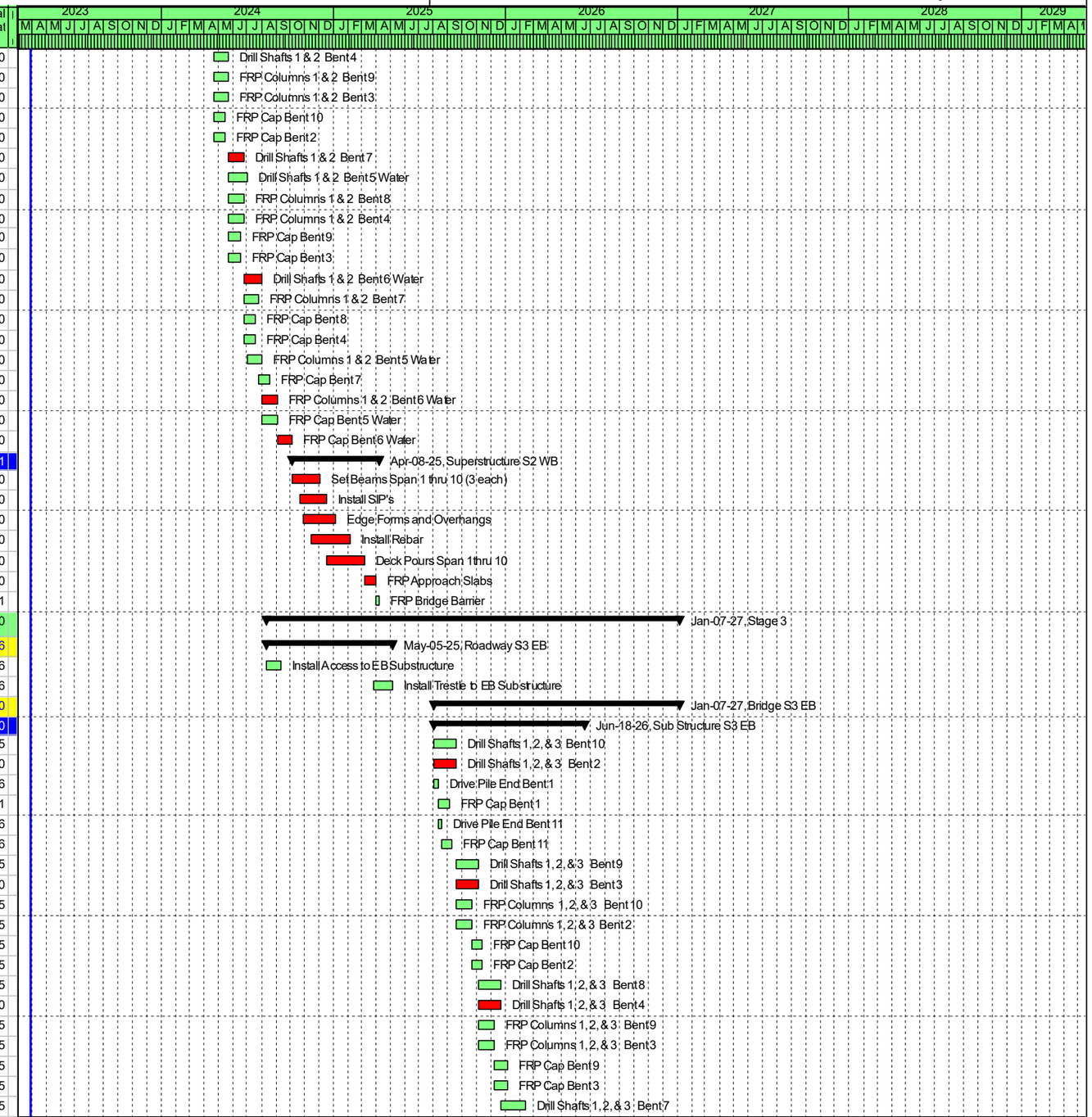

Remaining Level of Effort
Actual Level of Effort
Actual Work
Remaining Work
Critical Remaining Work
Milestone
Summary

CROWDER CONSTRUCTION Sr. Project Manager Kier Ouderkirk 704-995-4750

Activity ID	Activity Name	Original Duration	Start	Finish	Total Float
A2460	Drill Shafts 1,2,& 3 Bent 5 Water	35	Dec-23-25	Feb-20-26	0
A2440	FRP Columns 1,2,& 3 Bent 8	21	Dec-23-25	Jan-29-26	75
A2560	FRP Columns 1,2,& 3 Bent 4	21	Dec-23-25	Jan-29-26	75
A2480	FRP Cap Bent 8	15	Jan-29-26	Feb-23-26	75
A2590	FRP Cap Bent 4	15	Jan-29-26	Feb-23-26	75
A2470	FRP Columns 1,2,& 3 Bent 7	21	Feb-12-26	Mar-17-26	45
A2430	Drill Shafts 1,2,& 3 Bent 6 Water	35	Feb-20-26	Apr-15-26	0
A2540	FRP Columns 1,2,& 3 Bent 5 Water	21	Feb-20-26	Mar-25-26	35
A2520	FRP Cap Bent 7	15	Mar-17-26	Apr-08-26	45
A2570	FRP Cap Bent 5 Water	20	Mar-25-26	Apr-24-26	35
A2510	FRP Columns 1,2,& 3 Bent 6 Water	21	Apr-15-26	May-18-26	0
A2550	FRP Cap Bent 6 Water	20	May-18-26	Jun-18-26	0
Super Structure S3 EB		**125**	**Jun-18-26**	**Jan-07-27**	**0**
A2630	Set Beams Span 1 thru 10 (5 each)	30	Jun-18-26	Aug-05-26	0
A2640	Install SIP's	30	Jul-13-26	Aug-28-26	0
A2650	Edge Forms and Overhangs	40	Jul-21-26	Sep-22-26	0
A2660	Install Rebar	50	Aug-14-26	Oct-30-26	0
A2670	Deck Pours Span 1thru 10	46	Sep-22-26	Dec-04-26	0
A2680	FRP Approach Slabs	15	Dec-04-26	Dec-31-26	0
A2690	FRP Bridge Barrier	4	Dec-31-26	Jan-07-27	0
Stage 4		**269**	**Jan-07-27**	**Mar-10-28**	**0**
Roadway S4 WB		**269**	**Jan-07-27**	**Mar-10-28**	**0**
A2700	*****Switch EB traffic to New EB Bridge (EB in Final Alignment)	2	Jan-07-27	Jan-11-27	0
A2710	Remove Temp Bridge	15	Jan-11-27	Feb-03-27	252
A2720	Remove Temp Median Crossovers	30	Jan-11-27	Feb-26-27	237
A3120	Demo Existing Remaining WB Bridge	60	Jan-11-27	Apr-14-27	0
A3160	Remove Trestle	15	Jan-05-28	Jan-28-28	7
A3170	Remove Access to Sub Structure	20	Jan-28-28	Feb-29-28	7
A3180	Asphalt Tie in to Approch Slab	12	Feb-14-28	Mar-02-28	0
A3140	Remove Temp Barrier	2	Feb-22-28	Feb-24-28	5
A3150	*****Switch WB Traffic to Final Alignment	5	Mar-02-28	Mar-10-28	0
Bridge S4 WB		**0**			**0**
Sub Structure S4 WB		**80**	**Apr-14-27**	**Aug-18-27**	**0**
A2750	Drill Shaft 3 Bent 10	10	Apr-14-27	Apr-29-27	0
A2760	Drill Shaft 3 Bent 2	10	Apr-14-27	Apr-29-27	10
A2740	Drive Pile End Bent 1	5	Apr-14-27	Apr-22-27	60
A2770	FRP Cap Bent 1	15	Apr-22-27	May-14-27	60
A2780	Drive Pile End Bent 11	5	Apr-22-27	Apr-29-27	60
A2800	Drill Shaft 3 Bent 9	10	Apr-29-27	May-14-27	0
A2810	Drill Shaft 3 Bent 3	10	Apr-29-27	May-14-27	10
A2820	FRP Column 3 Bent 10	10	Apr-29-27	May-14-27	50
A2830	FRP Column 3 Bent 2	10	Apr-29-27	May-14-27	50
A2790	FRP Cap Bent 11	10	Apr-29-27	May-14-27	60
A2840	Drill Shaft 3 Bent 8	10	May-14-27	Jun-01-27	0
A2850	Drill Shaft 3 Bent 4	10	May-14-27	Jun-01-27	10
A2860	FRP Column 3 Bent 9	10	May-14-27	Jun-01-27	40
A2870	FRP Column 3 Bent 3	10	May-14-27	Jun-01-27	40
A2910	FRP Cap Bent 10	10	May-14-27	Jun-01-27	50
A2920	FRP Cap Bent 2	10	May-14-27	Jun-01-27	50
A2880	Drill Shafts 3 Bent 7	10	Jun-01-27	Jun-16-27	0
A2940	Drill Shafts 3 Bent 5 Water	15	Jun-01-27	Jun-24-27	10
A2890	FRP Columns 3 Bent 8	10	Jun-01-27	Jun-16-27	30
A2900	FRP Columns 3 Bent 4	10	Jun-01-27	Jun-16-27	30
A2960	FRP Cap Bent 9	10	Jun-01-27	Jun-16-27	40

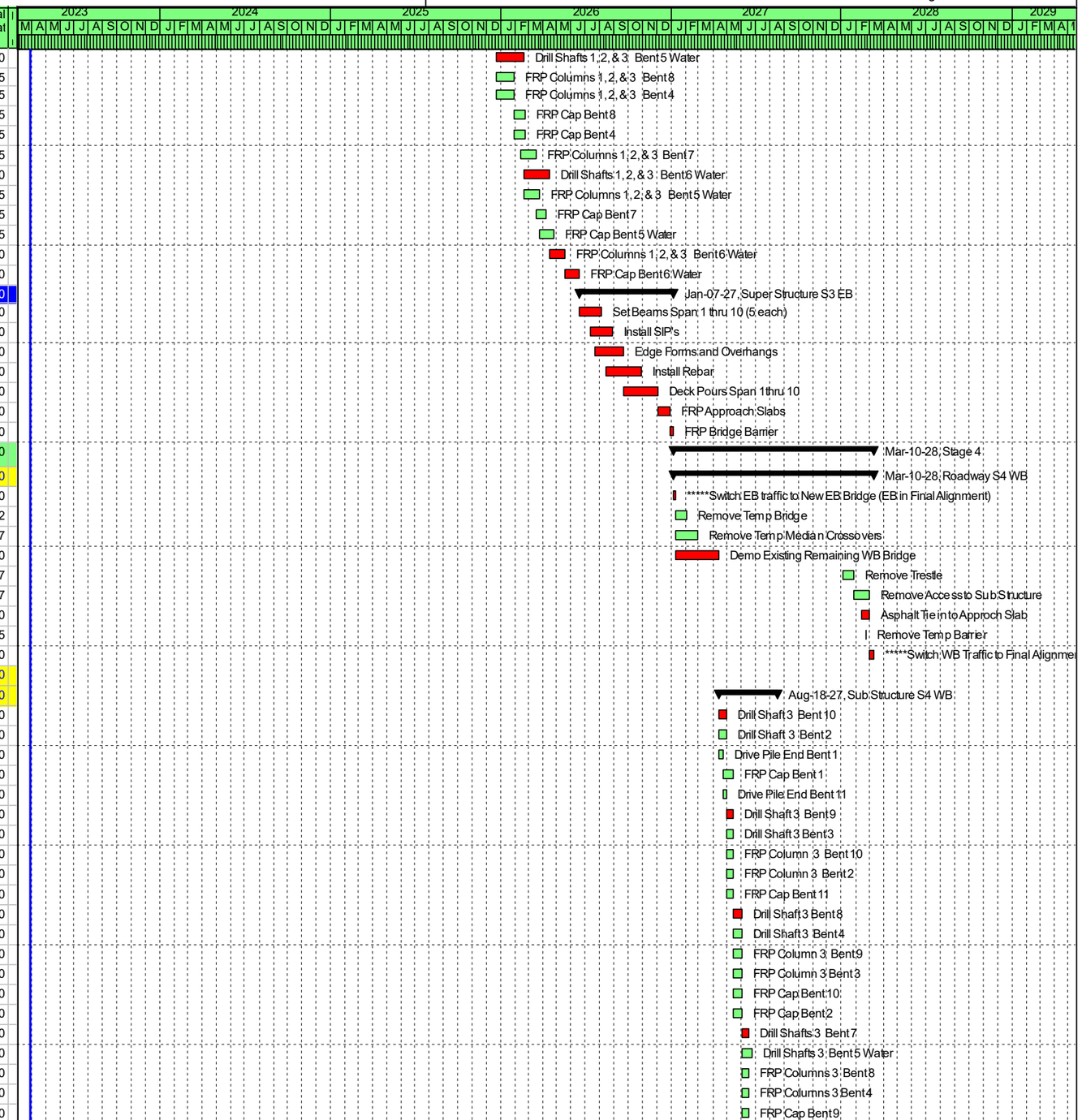

Remaining Level of Effort
Actual Level of Effort
Actual Work
Remaining Work
Critical Remaining Work
Milestone
Summary

Activity ID	Activity Name	Original Duration	Start	Finish	Total Float
A2970	FRP Cap Bent 3	10	Jun-01-27	Jun-16-27	40
A2930	Drill Shaft 3 Bent 6 Water	15	Jun-16-27	Jul-12-27	0
A2950	FRP Column 3 Bent 7	10	Jun-16-27	Jul-01-27	20
A2980	FRP Cap Bent 8	10	Jun-16-27	Jul-01-27	30
A2990	FRP Cap Bent 4	10	Jun-16-27	Jul-01-27	30
A3010	FRP Column 3 Bent 5 Water	10	Jun-24-27	Jul-12-27	10
A3020	FRP Cap Bent 7	10	Jul-01-27	Jul-19-27	20
A3000	FRP Column 3 Bent 6 Water	10	Jul-12-27	Jul-27-27	0
A3040	FRP Cap Bent 5 Water	15	Jul-12-27	Aug-03-27	10
A3030	FRP Cap Bent 6 Water	15	Jul-27-27	Aug-18-27	0
Super Structure S4 WB		115	Aug-18-27	Feb-22-28	5
A3050	Set Beams Span 1 thru 10 (3 each)	25	Aug-18-27	Sep-28-27	0
A3060	Install SIP's	25	Sep-02-27	Oct-13-27	0
A3070	Edge Forms and Overhangs	40	Sep-13-27	Nov-12-27	0
A3080	Install Rebar	30	Sep-28-27	Nov-12-27	0
A3090	Deck Pours Span 1thru 10	40	Oct-28-27	Jan-05-28	0
A3130	Closure Pour Span 1 thru 10	10	Jan-05-28	Jan-20-28	0
A3100	FRP Approach Slabs	15	Jan-20-28	Feb-14-28	0
A3110	FRP Bridge Barrier	5	Feb-14-28	Feb-22-28	5
Bridge Rehabilitation		88	Aug-28-23	Jan-17-24	1063
WB Bridges 5785 & 5786		88	Aug-28-23	Jan-17-24	1063
A1320	Partial Depth/Crack Deck Repair Left Lane	5	Aug-28-23	Sep-01-23	953
A1020	Partial Depth/Crack Deck Repair Left Lane	5	Aug-29-23	Sep-05-23	1145
A1330	Joint Repairs Type 1 - 5 Right Lanes	5	Sep-05-23	Sep-11-23	953
A1340	Barrier Rail RetroFit Left & Right Lanes	5	Sep-12-23	Sep-19-23	953
A1350	Expansion Joint Replacement	5	Sep-20-23	Sep-27-23	953
A1360	Barrier Rail Replacement	5	Sep-28-23	Oct-04-23	953
A1370	Wing Wall Replacement	5	Oct-05-23	Oct-11-23	953
A1380	Guard Rail Anchor Lug Repair	5	Oct-13-23	Oct-19-23	953
A1390	Bottom of Deck Spall Repairs	15	Oct-20-23	Nov-14-23	953
A1400	Bent Cap Repairs	20	Nov-15-23	Dec-15-23	953
A1410	Remove and Replace Approach Slabs	15	Dec-18-23	Jan-11-24	953
A1150	Deck Drain Retrofit	2	Jan-16-24	Jan-17-24	1063
EB Bridges 5781 & 5780		86	Aug-28-23	Jan-15-24	1065
A1170	Joint Repairs Type 1 - 5 Left Lane	5	Aug-28-23	Sep-01-23	1146
A1160	Partial Depth/Crack Deck Repair Left Lane	5	Aug-29-23	Sep-05-23	952
A1180	Partial Depth/Crack Deck Repair Right Lane	5	Sep-06-23	Sep-12-23	1140
A1190	Joint Repairs Type 1 - 5 Right Lanes	5	Sep-06-23	Sep-12-23	952
A1200	Barrier Rail RetroFit Left & Right Lanes	5	Sep-13-23	Sep-20-23	952
A1210	Expansion Joint Replacement	5	Sep-21-23	Sep-28-23	952
A1220	Barrier Rail Replacement	5	Sep-29-23	Oct-05-23	952
A1230	Wing Wall Replacement	5	Oct-06-23	Oct-13-23	952
A1240	Guard Rail Anchor Lug Repair	5	Oct-16-23	Oct-20-23	952
A1260	Bottom of Deck Spall Repairs	15	Oct-23-23	Nov-15-23	952
A1270	Bent Cap Repairs	20	Nov-16-23	Dec-18-23	952
A1280	Remove and Replace Approach Slabs	15	Dec-20-23	Jan-15-24	952
Level of Effort Activities		1200	Jun-12-23	Sep-06-28	0
A1570	Construction Survey	1200	Jun-12-23	Sep-06-28	0
A1580	SCDOT Partnering	1200	Jun-12-23	Sep-06-28	0
A1590	Maintenance of Traffic & Inspections	1200	Jun-12-23	Sep-06-28	0
A1600	Maintenance of Erosion Controls and Inspection	1200	Jun-12-23	Sep-06-28	0
A1610	Quality Assurance & Quality Control	1200	Jun-12-23	Sep-06-28	0
A1620	CPM Schedule Updates	1087	Jun-12-23	Mar-10-28	0

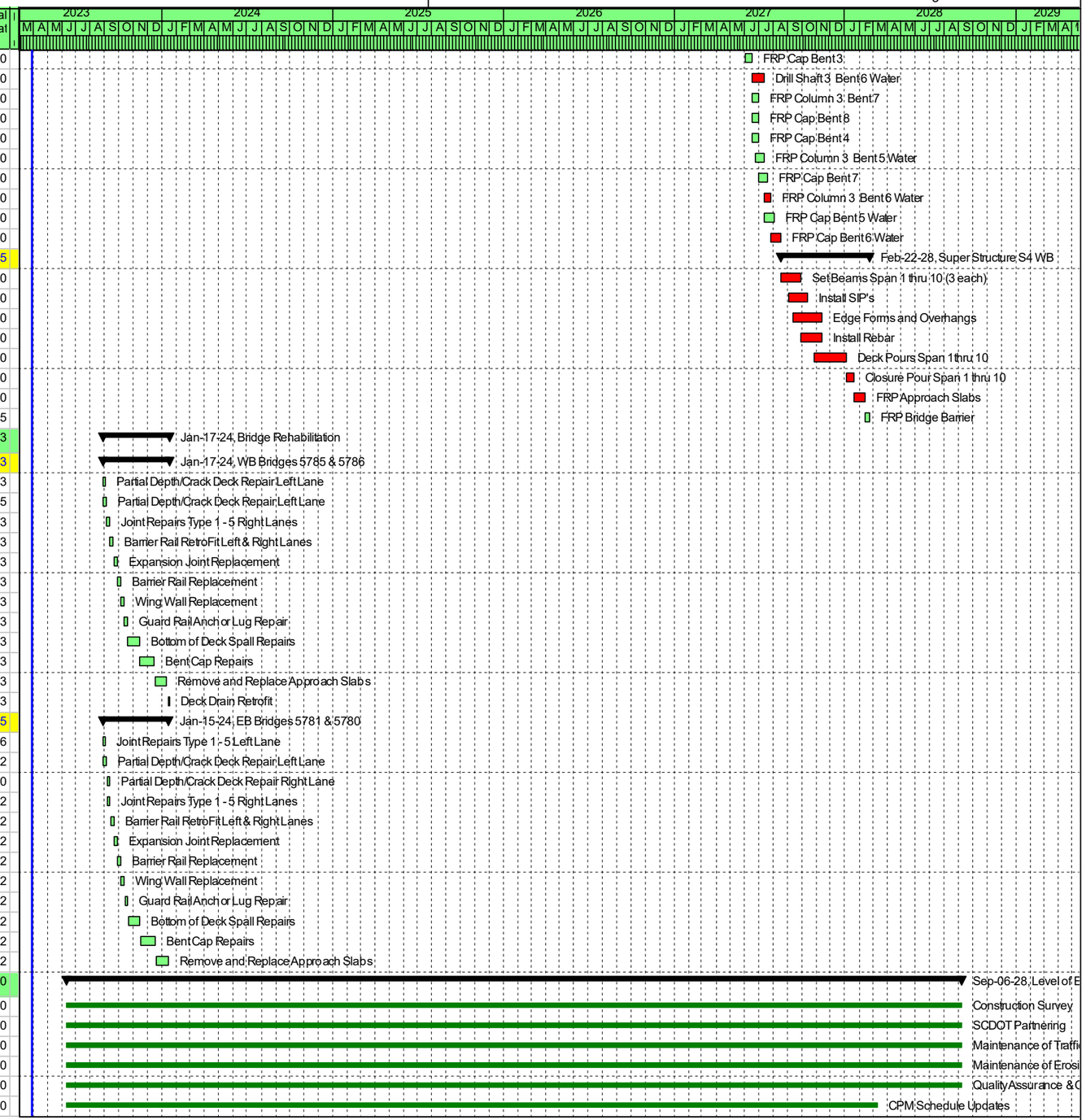

Remaining Level of Effort
Actual Level of Effort
Actual Work
Remaining Work
Critical Remaining Work
Milestone
Summary

CROWDER CONSTRUCTION Sr. Project Manager Kier Ouderkirk 704-995-4750

Appendix B
Required Forms & Confidential / Proprietary Information

12. STIPEND ACKNOWLEDGEMENT FORM

Stipend Acknowledgement Form

I-20 over Wateree River Bridge Replacement and Swamp Overflow Bridge Rehabilitations Kershaw County

Proposer: Crowder Construction Company

ADDRESS: PO Box 30007, Charlotte, NC 28230

The undersigned Proposer, hereby:

☐ Waives the stipend for this Project.

☒ Accepts the stipend for this Project.

By accepting the stipend for this Project, Proposer agrees:

1) to execute and include the Stipend Agreement in Article XIII of the RFP with its RFP response;

2) to submit an invoice with FEIN number for the stipend amount to the SCDOT POC after SCDOT's posting of the Notice of Award on SCDOT's Design-Build Website.;

3) to transfer all rights to its Work Product used to develop the Proposal as of the date of this acknowledgement. "Work Product" " means all submittals, including ATCs, ideas, innovations, solutions, methods, processes, design concepts, materials, electronic files, marked up drawings, cross sections, quantity lists and intellectual property, made by Proposer during the RFP process, including the Proposal, exchange of information during the pre-Proposal and post-Proposal period.

SCDOT will pay the stipend to each eligible unsuccessful Proposer, who has signed a Stipend Agreement, within ninety (90) days after execution of the Contract or the decision to not award a contract.

February 9, 2023
Date

Proposer

George F. Ellis, Exec. Vice President
Print Name

13. STIPEND AGREEMENT

STIPEND AGREEMENT
Project ID: 2847360

I-20 over Wateree River Bridge Replacement and Swamp Overflow Bridge Rehabilitations
Kershaw County

THIS STIPEND AGREEMENT (the "Agreement") is made and entered into as of the 31st day of January, 2023 by and between the SOUTH CAROLINA DEPARTMENT OF TRANSPORTATION (hereinafter "SCDOT"), and Crowder Construction Company ("Proposer"), with reference to the following facts:

SCDOT issued a Request for Proposal ("RFP") for design and construction of the above-referenced Design-Build Project ("Project"), pursuant to procurement authority granted in Section 57-5-1625 of the S.C. Code of Laws, 1976, as amended. The RFP provided for payment of stipends as provided herein. Capitalized terms used, but not defined, have the meanings ascribed in the RFP.

NOW, THEREFORE, Proposer hereby agrees as follows:

1. Work Product.

1.1 Proposer shall prepare and submit a responsible and responsive Technical Proposal and Cost Proposal that conforms in all material respects to the requirements and provisions of the RFP, as determined by SCDOT, and are timely received by SCDOT in accordance with the RFP Milestone Schedule.

1.2 By signing this Stipend Agreement, Proposer agrees to transfer full and complete ownership to SCDOT of all Work Product. The Work Product (as defined below) shall become the property of SCDOT without restriction or limitation on its use, without further compensation or consideration, and can be used in connection with this Project or any future projects by SCDOT. Neither Proposer nor any of its team members shall copyright any of the material developed under this Agreement.

1.3 The term "Work Product" shall mean the Proposal and all material, electronic files, marked up drawings, cross sections, quantity lists, submittals, alternative technical concepts (ATC), ideas, innovations, solutions, methods, processes, design concepts, Trade Secrets or confidential information, and intellectual property, made by or produced for Proposer in the development and submission of the Technical and Cost Proposal, including exchanges of information during the pre-Proposal and post-Proposal period.

2. Compensation and Payment.

2.1 A stipend to Proposer for the Work Product described herein shall be $145,000.00 and is payable to Proposer that was determined to be responsible and (1) submitted a responsive Technical Proposal and responsive Cost Proposal to the RFP which is not selected for award of this Project, or (2) was awarded the Contract but the Contract was terminated by SCDOT for convenience after the Submittal of Proposal Due Date (See Final RFP Milestone schedule) but prior to the Notice to Proceed #1. Responsibility of Proposers and responsiveness of the Technical Proposal and Cost Proposal will be determined by SCDOT as a condition of payment.

2.2 SCDOT will pay the stipend to Proposer as follows, subject (as applicable) to the following conditions:

(a) Proposer has submitted this signed Stipend Agreement, unchanged with its response to the RFP.

(b) After posting of the Notice of Award on SCDOT's Design-Build Website, Proposer has submitted to SCDOT an invoice, with FEIN Number, for the Stipend amount.

(c) After execution of the Contract or the decision not to award a contract, SCDOT will pay the invoice for the stipend amount to the unsuccessful Proposer meeting the criteria of Section 2.1 within 90 calendar days of receipt of the invoice from Proposer.

(d) If the procurement is suspended or cancelled prior to the Proposal Due Date (see FINAL RFP Milestone schedule), no stipend will be paid to Proposer.

(e) After the submittal of Proposals, but prior to award, if the procurement is cancelled, all Proposers that provide a responsive Technical Proposal and Cost Proposal to the final RFP and submitted a signed Stipend Agreement with their RFP shall receive the stipend

(f) In the event of a Best and Final Offer, only one stipend will be paid to each Proposer that executed a Stipend Agreement and met the other criteria and conditions herein.

(g) No stipends will be paid for submitting RFQ responses.

(h) No stipends will be paid to a Proposer who withdraws at any time from this procurement.

2.3 Acceptance by the Proposer of payment of the stipend amount from SCDOT shall constitute a waiver by Proposer of any and all right, equitable or otherwise, to bring any claim in connection with this procurement, procurement process, award of the Contract, or cancellation of this procurement.

2.4 The Proposer awarded the contract shall be not eligible to receive a stipend.

2.5 If Proposer elects to waive payment of the stipend, SCDOT will not use the ideas or information contained in that Proposer's Proposal for this Project. However, the Proposer's Proposal will be subject to the South Carolina Freedom of Information Act.

3. Indemnities.

3.1 Subject to the limitations contained in Section 3.2, Proposer shall indemnify, protect and hold harmless SCDOT and its directors, officers, employees and contractors from, and Proposer shall defend at its own expense, all claims, costs, expenses, liabilities, demands, or suits at law or equity arising, in whole or in part, from the negligence or willful misconduct of Proposer or any of its agents, officers, employees, representatives or subcontractors or breach of any of Proposer's obligations under this Agreement.

3.2 This indemnity shall not apply with respect to any claims, demands or suits arising from use of the Work Product by SCDOT.

4. Compliance With Laws.

4.1 Proposer shall comply with all federal, state, and local laws, ordinances, rules, and regulations applicable to the work performed or paid for under this Agreement and covenants and agrees that it and its employees shall be bound by the standards of conduct provided in applicable laws, ordinances, rules, and regulations as they relate to work performed under this Agreement. Proposer agrees to incorporate the provisions of this paragraph in any subcontract into which it might enter with reference to the work performed pursuant to this Agreement.

4.2 The Proposer agrees (a) not to discriminate in any manner against an employee or applicant for employment because of race, color, religion, creed, age, sex, marital status, national origin, ancestry or disability of a qualified individual with a disability; (b) to include a provision similar to that contained in subsection (a) in any subcontract; and (c) to post and to cause subcontractors to post in conspicuous places available to employees and applicants for employment, notices setting forth the substance of this clause.

5. Assignment.

Proposer shall not assign this Agreement without SCDOT's prior written consent. Any assignment of this Agreement without such consent shall be null and void.

6. Miscellaneous.

6.1 Proposer and SCDOT agree that Proposer, its team members, and their respective employees are not agents of SCDOT as a result of this Agreement.

6.2 This Agreement, together with the RFP, as amended from time to time, the provisions of which are incorporated herein by reference, embodies the entire agreement of the parties. There are no promises, terms, conditions, or obligations other than those contained herein or in the RFP, and this Agreement shall supersede all previous communications, representation, or agreements, either oral or written, between the parties hereto.

6.3 It is understood and agreed by the parties hereto that if any part, term, or provision of this Agreement is by the courts held to be illegal or in conflict with any law of the State of South Carolina, the validity of the remaining portions or provisions shall not be affected, and the rights and obligations of the parties shall be construed and enforced as if the Agreement did not contain the particular part, term, or provisions to be invalid.

6.4 This Agreement shall be governed by and construed in accordance with the laws of the State of South Carolina.

IN WITNESS WHEREOF, the parties have executed this Agreement as of the date first written above.

Witness:

_____

Recommended:

_____
{INSERT NAME}
Alternative Delivery Program Manager

Witness:

_____

_____

SOUTH CAROLINA DEPARTMENT
OF TRANSPORATION

By: _____
{INSERT NAME}
Alternative Delivery Engineer

Proposer

Crowder Construction Company
Name of Proposer

By: _____

Its: George F. Ellis, Exec. Vice President

11. EQUAL EMPLOYMENT OPPORTUNITY CERTIFICATION

(COMPLETE THIS SECTION FOR FEDERAL PROJECTS ONLY)
EQUAL EMPLOYMENT OPPORTUNITY PERFORMANCE

Select the Certification that applies to the PROPOSER:

Certification (1) [X] or Certification (2) [ ]

Select the appropriate responses in the applicable Certification:

Certification (1): Pursuant to 41 C.F.R. §60-1.7(b)(1), Previous Equal Employment Opportunity Performance Certification, as the Prospective Prime Contractor, I HEREBY CERTIFY THAT I:

(a) **(HAVE / ~~HAVE NOT~~)** developed and filed an Affirmative Action Program pursuant to 41C.F.R. §60-2 and/or 60-4;

(b) **(HAVE / ~~HAVE NOT~~)** participated in a previous contract or subcontract subject to the equal opportunity clause;

(c) **(HAVE / ~~HAVE NOT~~)** filed with the Joint Reporting Committee, the Director of Office of Federal Contract Compliance, or the Equal Employment Opportunity Commission, all reports due under the applicable filing requirements,

OR

Certification (2): I, HEREBY CERTIFY that as the Prospective Prime Contractor submitting this Proposal, **(CLAIM / DO NOT CLAIM)** exemption from the submission of the Standard Form 100 (EEO-1) due to the fact that it employs a total of less than fifty (50) employees under C.F.R. §60-1.7, or qualifies for an exempted status under 41 C.F.R. §60-1.5.

I FURTHER CERTIFY that the above Certification will be made part of any Subcontract Agreement, or other agreement involved with this project.

Executed on 2/9, 20 23 .

Signed: _____
(Officer/PROPOSER) George F. Ellis

Title: Executive Vice President

Company: Crowder Construction Company

Address: PO Box 30007, Charlotte, NC 28230

Note: The above certification is required by the Equal Employment Opportunity Regulations of the Secretary of Labor (41 CFR 60-1.7(b)(1)), and must be submitted by PROPOSERS only in connection with contracts which are subject to the equal opportunity clause. Contracts that are exempt from the equal opportunity clause are set forth in 41 CFR 60-1.5. (Generally, only contracts of $10,000 or under are exempt.)

Currently, Standard Form 100 (EEO-1) is the only report required by Executive Orders or their implementing regulations.

Proposers, Primary Members, or proposed Subcontractors (any tier) and Consultants who have participated in a previous contract subject to the Executive Orders and have not filed the required reports shall note that 41 CFR 60-1.7(b)(1) prevents the award of contracts and subcontracts unless such contractor submits a report covering the delinquent period or such other period specified by the Federal Highway Administration or by the Director, Office of Federal Contract Compliance, U.S. Department of Labor.

10. NON-COLLUSION CERTIFICATION

NON-COLLUSION CERTIFICATION

Contract ID: 2847360

IN ACCORDANCE WITH THE PROVISIONS OF S.C. CODE ANN. §§ 39-3-10 ET.SEQ., 39-5-10 ET. SEQ., 15 U.S.C. §45; 23 C.F.R. §635.112(F); AND 28 U.S.C. §1746, I HEREBY ACKNOWLEDGE THAT I AM AN OFFICER OF THE PROPOSER FIRM AND, UNDER PENALTY OF PERJURY UNDER THE LAWS OF THE UNITED STATES AND SOUTH CAROLINA, DECLARE, BY MY CERTIFICATION BELOW, THAT THE FOLLOWING IS TRUE AND CORRECT, AND FURTHER, THAT THIS JOINT-VENTURE, FIRM, PARTNERSHIP, ASSOCIATION OR CORPORATION, OR ANY OTHER LEGAL ENTITY HAS NOT, EITHER DIRECTLY OR INDIRECTLY, ENTERED INTO ANY AGREEMENT, PARTICIPATED IN ANY COLLUSION, OR OTHERWISE TAKEN ANY ACTION IN RESTRAINT OF FREE COMPETITIVE BIDDING IN CONNECTION WITH THE SUBMISSION OF A BID PROPOSAL ON THE ABOVE REFERENCED PROJECT.

BY CHECKING THIS BOX [X], I CERTIFY THAT I HAVE READ, UNDERSTAND, ACCEPT, AND ACKNOWLEDGE ALL OF THE ABOVE STATEMENTS.

Executed on February 9, 2023
(Date)

Signed: _____
(Officer/Proposer)

George F. Ellis, Exec. Vice President
(Title)

Crowder Construction Company
(Address)

PO Box 30007, Charlotte, NC 28230

South Carolina
Department of Transportation

NOTICE OF RECEIPT

I-20 over Wateree River Bridge Replacement and Swamp Overflow Bridge Rehabilitations Design-Build Project– Contract ID 2847360
Kershaw County

Addendum 1

The information in this addendum shall be made part of the contract documents. PROPOSERS are instructed to incorporate the information into the previously provided RFP documents.

PROPOSERS are required to sign this document and enclose it with their Technical Proposal. Receipt of this signed document by The South Carolina Department of Transportation serves as confirmation that the PROPOSER has received and incorporated this Addendum into the contract documents.

Confirmation Statement:

I, the PROPOSER confirm that I have received this addendum package and have incorporated the information provided in the addendum into the contract documents.

PROPOSER's Signature

February 9, 2023
Date

George F. Ellis, Executive Vice President
Printed Name

For: Crowder/RKK
Design-Build Team Name

South Carolina
Department of Transportation

NOTICE OF RECEIPT

I-20 over Wateree River Bridge Replacement and Swamp Overflow Bridge Rehabilitations Design-Build – Contract ID 2847360
Kershaw County

Addendum 2

The information in this addendum shall be made part of the contract documents. PROPOSERS are instructed to incorporate the information into the previously provided RFP documents.

PROPOSERS are required to sign this document and enclose it with their Technical Proposal. Receipt of this signed document by The South Carolina Department of Transportation serves as confirmation that the PROPOSER has received and incorporated this Addendum into the contract documents.

Confirmation Statement:

I, the PROPOSER confirm that I have received this addendum package and have incorporated the information provided in the addendum into the contract documents.

PROPOSER's Signature

February 9, 2023
Date

George F. Ellis, Executive Vice President
Printed Name

For: Crowder/RKK
Design-Build Team Name

South Carolina
Department of Transportation

NOTICE OF RECEIPT

I-20 over Wateree River Bridge Replacement and Swamp Overflow Bridge Rehabilitations Design-Build – Contract ID 2847360
Kershaw County

Addendum 3

The information in this addendum shall be made part of the contract documents. PROPOSERS are instructed to incorporate the information into the previously provided RFP documents.

PROPOSERS are required to sign this document and enclose it with their Technical Proposal. Receipt of this signed document by The South Carolina Department of Transportation serves as confirmation that the PROPOSER has received and incorporated this Addendum into the contract documents.

Confirmation Statement:

I, the PROPOSER confirm that I have received this addendum package and have incorporated the information provided in the addendum into the contract documents.

PROPOSER's Signature

February 9, 2023
Date

George F. Ellis, Executive Vice President
Printed Name

For: Crowder/RKK
Design-Build Team Name

South Carolina
Department of Transportation

NOTICE OF RECEIPT

I-20 over Wateree River Bridge Replacement and Swamp Overflow
Bridge Rehabilitations Design-Build – Contract ID 2847360
Kershaw County

Addendum 4

The information in this addendum shall be made part of the contract documents. PROPOSERS are instructed to incorporate the information into the previously provided RFP documents.

PROPOSERS are required to sign this document and enclose it with their Technical Proposal. Receipt of this signed document by The South Carolina Department of Transportation serves as confirmation that the PROPOSER has received and incorporated this Addendum into the contract documents.

Confirmation Statement:

I, the PROPOSER confirm that I have received this addendum package and have incorporated the information provided in the addendum into the contract documents.

PROPOSER's Signature

February 9, 2023
Date

George F. Ellis, Executive Vice President
Printed Name

For: Crowder/RKK
Design-Build Team Name

3.3 TEAM STRUCTURE AND PROJECT EXECUTION

RFP 3.12

Changes in Proposer's Organization; Key Individuals

The Key Individuals we identified in our SOQ remain the same and there is no change. The Crowder-RK&K Team and our Key Individuals are committed to this project.

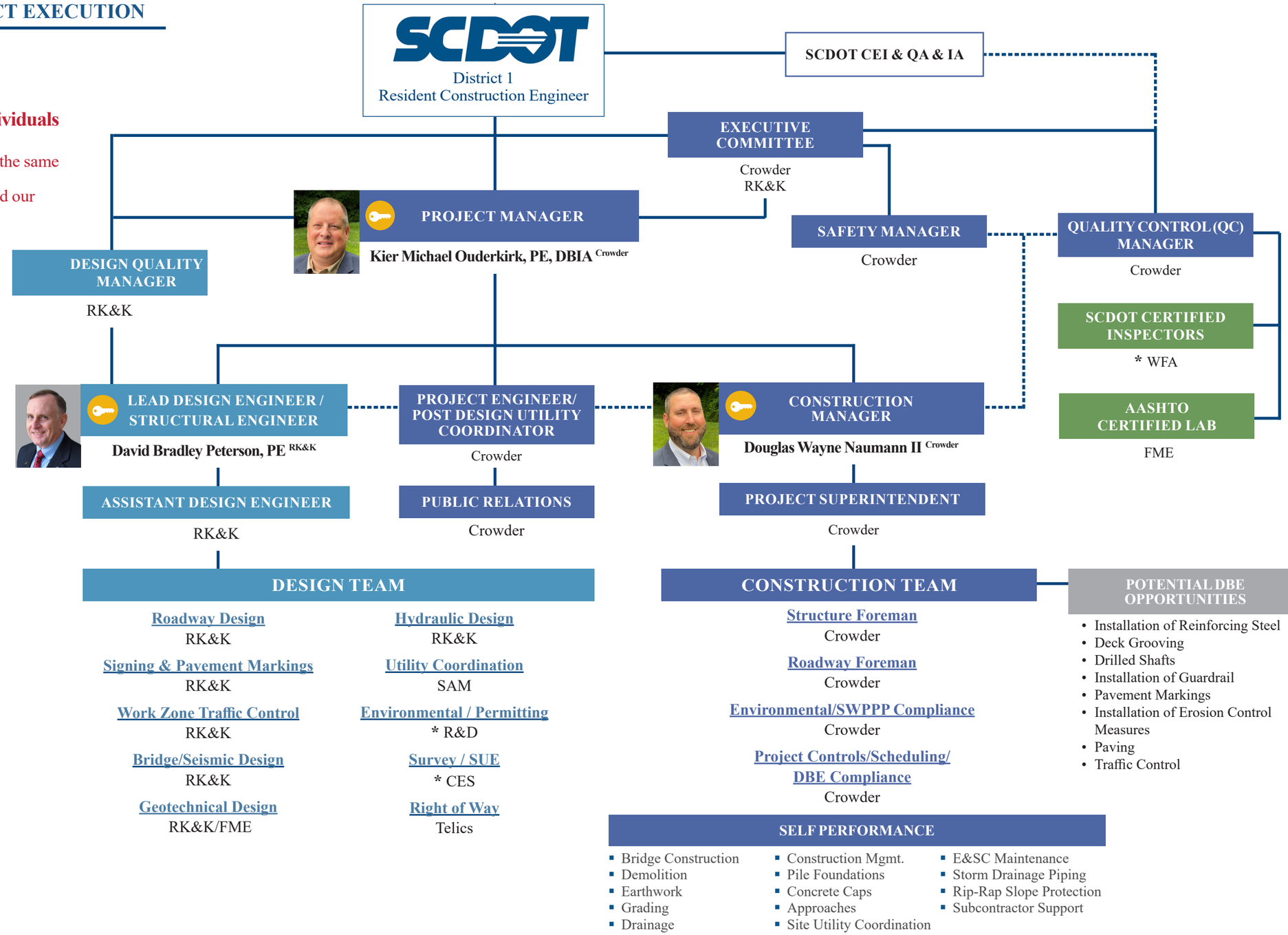

Team Member	
Crowder	Crowder Construction Company
RK&K	Rummel, Klepper & Kahl, LLP
CES	CES Group Engineers, LLP *
FME	F&ME Consultants
R&D	Robbins & DeWitt *
SAM	Surveying & Mapping, LLC
TEL	TELICS
WFA	Wilson Ferguson Associates *
	RFQ Key Individuals
	Direct Report
	Communication
*	Disadvantaged Business Enterprise (DBE)

PO Box 30007 (28230-0007)
6409 Brookshire Boulevard (28216)
Charlotte, North Carolina
Telephone: 704.332.8184 Fax 704.372.9946
www.crowderusa.com

CROWDER CONSTRUCTION COMPANY

PROPOSERS STATEMENT

I-20 over Wateree River Bridge Replacement and Swamp Overflow Bridge Rehabilitations Design-Build Project Contract ID 2847360, Kershaw County

Proposed Key Individual, Kier Michael Ouderkirk, PE, DBIA, Design Build Project Manager, and Douglas Wayne Naumann II, Construction Manager, both identified in the original organizational chart in the Crowder Construction Company/RK&K Statement of Qualifications, will be available barring any unforeseen circumstances, at the earliest of the times and durations identified in the RFQ and RFP, until expiration of the Warranty Period, or such earlier date as the Contract is terminated or SCDOT releases, in writing, such Key Individual from this requirement.

Kier Michael Ouderkirk, PE, DBIA, Design Build Project Manager — February 9, 2023

George F. Ellis, Executive Vice President — February 9, 2023

State: North Carolina
County: Mecklenburg

I, Emily Gulledge, a Notary Public for Said County and State, do hereby certify that Kier Michael Ouderkirk and George F. Ellis, personally appeared before me this day and acknowledged the due execution of the foregoing statement. witness my hand and official seal this 9th day of February, 2023.
My commission expires August 1, 2027.

Notary Public

EMILY GULLEDGE
My Commission Expires
NOTARY PUBLIC
MECKLENBURG COUNTY, NC

PROPOSERS STATEMENT

I-20 over Wateree River Bridge Replacement and Swamp Overflow Bridge Rehabilitations Design-Build Project Contract ID 2847360, Kershaw County

Proposed Key Individual, David Bradley Peterson, PE, Lead Design Engineer/Structural Engineer identified in the original organizational chart in the Crowder Construction Company/RK&K Statement of Qualifications, will be available barring any unforeseen circumstances, at the earliest of the times and durations identified in the RFQ and RFP, until expiration of the Warranty Period, or such earlier date as the Contract is terminated or SCDOT releases, in writing, such Key Individual from this requirement.

B. Keith Skinner — February 9, 2023
B. Keith Skinner, PE – Partner, RK&K

Kier Michael Ouderkirk — February 9, 2023
Kier Michael Ouderkirk, PE, DBIA, Design Build Project Manager

State: North Carolina
County: Wake

I, Lauren Piper, a Notary Public for Said County and State, do hereby certify that B. Keith Skinner, PE personally appeared before me this day and acknowledged the due execution of the foregoing statement. witness my hand and official seal this 9th day of February, 2023.
My commission expires December 27, 2025.

LAUREN PIPER NOTARY MY COMMISSION EXPIRES 12-27-2025 PUBLIC WAKE COUNTY, NC

Lauren Piper
Notary Public

State: North Carolina
County: Mecklenburg

I, Emily Gulledge, a Notary Public for Said County and State, do hereby certify that Kier Michael Ouderkirk, PE, DBIA personally appeared before me this day and acknowledged the due execution of the foregoing statement. witness my hand and official seal this 9th day of February, 2023.
My commission expires August 1, 2027.

EMILY GULLEDGE My Commission Expires NOTARY PUBLIC MECKLENBURG COUNTY, NC

Notary Public

g. Confidential and Proprietary Information Page List

N/A

South Carolina Department of Transportation

Columbia, South Carolina

SOUTH CAROLINA DEPARTMENT OF TRANSPORTATION

PRIME CONTRACTOR

PREQUALIFICATION CERTIFICATE

This Certifies that your company has complied with the rules and regualtions of the Department and the State of South Carolina, and subject to the rules and regulations for a prime contractor, is declared eligible to submit a bid and be awarded any construction contract issued by the Department, subject to obtaining proper bonds and insurance acceptable to the Department and complying with all other statutory and contract requirements.

All BIDS SUBMITTED TO THE DEPARTMENT MUST BE IN THE NAME AS SHOWN BELOW.

CROWDER CONSTRUCTION COMPANY

Vendor ID: **1CR007**

Issued : **April 26, 2022**

Expires: **May 31, 2023**

Approved By: Marie A. Derrick
Prequalification Coordinator

SCDOT FORM CERT-JANUARY 8, 2019

i. Copy of Joint Venture Organizational Agreement

N/A

Number	Description	Added Value/Benefits	Cost/Schedule Impacts	Self-imposed Assurance
1	Our approach using FATC #11 ensures the WB direction will have a future third travel lane. This will minimize future widening cost/work that will have to be done.	Materials, Designs, & Methods that Minimize Maintenance Costs and Benefits	$2.7 million in additional cost is incurred due to the added future third travel lane in the WB direction.	If the additional 12' bridge width is not constructed, Crowder will remiburse the SCDOT for the lack of added value.
2	Our approach to MOT using FATC #11 assures that traffic shifts are minimized to one shift in each direction of travel. Through the utilization of a temporary pond bridge, the proper design speeds can be achieved during the crossovers.	Minimizing Impacts to Traffic and increased LOS.	Cost is reduced by $5 million as compared to the conceptual plans. This savings will be reflected inside our final bid pricing.	If FATC #11 is not utilized, Crowder will adsorb the increased cost to construct the project.
3	Our construction crews will relocate our laydown area to the unused side of the roadway to ensure that materials and equipment do not need to cross I-20 during the midst of each construction phase.	Minimizing Impacts to Traffic and increased LOS.	Cost incurred due to relocating the laydown area is balanced by the savings resulting from less traffic control and other scopes.	Crowder will adsorb the added cost of traffic control, access and egrees, if this method is not utilized.
4	All overwater work will be built using temporary work bridges.	Construction Techniques that Limit In-Water Construction	Utilizing temporary work bridges results in schedule certainty as opposed to barges, since during high/fast water events, we will not have to demobilze from the river.	Crowder will adsorb the added cost of downtime and barge mob/demob in the even that temporary work bridges cannot be utilized.
5	The use of all drilled shaft foundations within the waterway ensure the least in-water impact possible.	Construction Techniques that Limit In-Water Construction	The use of drilled shafts are signficantly more economical than pile foundations on a spread footer due to the savings resulting from not needing to utilize a cofferdam.	Crowder will adsorb the added cost of pile foundations and spread footers in the event drilled shafts cannot be utilized.
6	At a minimum, turbidity curtains will be used during the removal of existing Piers F & G for both existing structures. Futhermore, equipment and saw cutting efforts will be optimized to ensure the largest peices possible can be removed at a given time in order to reduce the in-water work that occures.	Construction Techniques that Limit In-Water Construction	A $200,000 cost savings results from not using a sheet pile cofferdam for this existing pier removal.	Crowder will adsorb the added cost of the sheet pile cofferdam if turbidity curtain cannot be utilized.

Appendix C
Approved FATCs

Formal ATCs Round 2

Date Received: **12/2/2022** Date Reponse Sent: **12/19/2022**

Crowder - RK&K			SCDOT	
ATC No.	Primary Discipline	Concept	Response	Justification
1	Roadway	Median reduction over Wateree River	Not Approved	SCDOT is concerned the proposed permanent abrupt horizontal alignment change will create an increase in traffic crashes.
2	Roadway	Alignment shift to build both bridges on new alignment	Approved	
5	Roadway	Modify the Super Elevation requirements for temporary pavement conditions during construction	Approved	
6	Traffic	Revise the single lane closure prohibitions of I-20 between January 2nd and April 30th	Not Approved	Information provided in the FATC raises the hourly volume threshold from 1200 veh/hr to 1385 veh/hr based on LOS analysis. SCDOT set the 1200 veh/hr based on previous experience and not LOS analysis.
7	Structures	Locate the ends of bridge at same location as existing bridge. Existing piles left in place, cutoff one foot below bottom of existing cap.	Approved	
8	Structures	Reduce offset distance to less than 10 feet between centerline of proposed bent and centerline of existing pile bents	Approved	
9	Roadway	Phased WB Alignment	Not Approved	This is different than original ATC 9 and is not a valid submittal.
10	Structures	Exceed the maximum girder spacing of 12 feet specified in the RFP	Approved	

Approved Formal ATCs being incorporated into the Cost Proposal

South Carolina
Department of Transportation

ALTERNATIVE TECHNICAL CONCEPTS

I-20 over Wateree and Overflow Bridges - Contract ID 284760 - Kershaw County

Formal ATCs Round 2

Date Received: **1/12/2023** Date Reponse Sent: **1/20/2023**

Crowder - RK&K			SCDOT	
ATC No.	Primary Discipline	Concept	Response	Justification
11	Roadway	Shift the new I-20 WB bridge over the Wateree River off of existing alignment and build the bridge in two-phases.	Approved	

Approved Formal ATCs being incorporated into the Cost Proposal

Post Office Box 191
Columbia, South Carolina 29202-0191

Phone: (803) 737-2314
TTY: (803) 737-3870

AN EQUAL OPPORTUNITY
AFFIRMATIVE ACTION EMPLOYER

Formal Alternative Technical Concepts Submittal Form

Project: I-20 over Wateree River Bridge Replacement **Project ID:** 2847360

ATC No.: 5 **Priority:** High **Team:** Crowder Construction/RK&K **Date:** 12/2/22

Description (required):

This ATC is to modify the Super Elevation requirements for TEMPORARY pavement conditions during construction.

Usage:

RFP Exhibit 4d-Part 2, Section 2.6 allows a 60 mph design speed for temporary alignments during construction on the west end of the main channel bridges. The temporary mainline alignments need to tie to the existing pond bridges, including roadway cross slopes. Utilizing AASHTO superelevation with emax of 4% for temporary staging alignments only, meeting the Vd of 60 mph allowed by the RFP, would facilitate construction of temporary roadway tie-ins to the existing pond bridges by minimizing the length of superelevation transition and minimizing the pavement elevation changes required between the existing normal crown condition and the temporary alignment curve superelevation condition. Use of AASHTO superelevaton with emax of 4% for the temporary alignment would also facilitate reconstruction of the tie-ins to the existing pond bridges from the temporary alignment to the permanent (final) roadway by providing similar design superelevation rates. The final east and west bound alignments of I-20 will meet superelevation requirements of the 8% table as shown in Section 5.3.2 of the SCDOT Roadway Design Manual.

Deviations (required):

Section 5.3.2 of the SCDOT Roadway Design Manual for superelevation (open-road conditions) requires an emax of 8% rural roadways with design speeds (Vd) of 50 mph and higher.

Justification:

Minimizing the length of superelevation transitions and roadway cross-slope changes minimizes the amount (length and width) of pavement reconstruction for the temporary alignment and then for the final alignment, which enhances safety for workers and the traveling public by minimizing traveling public exposure (smaller work zone and shorter construction duration for pavement reconstruction / cross-slope transitions) during temporary tie-in construction and construction to change from the temporary alignment to the final alignment.

Schedule:

We anticipate reducing the construction schedule by 4 weeks if this ATC is approved. This ATC will minimize construction time for temporary alignment tie-ins to the existing pond bridges and construction time to change from the temporary alignments to the final alignments for tie-ins to the existing pond bridges.

Impacts:

No adverse impacts are expected with the implementation of this ATC.

History:

AASHTO Policy on Geometric Design Of Highways and Streets, Table 3.8 allows use of the 4% eMax table for 60 mph design speed for curves with radii under 10,300 ft.

Risks:

No risks to SCDOT or others are anticipated.

Post Office Box 191
Columbia, South Carolina 29202-0191

Phone: (803) 737-2314
TTY: (803) 737-3870

AN EQUAL OPPORTUNITY
AFFIRMATIVE ACTION EMPLOYER

Formal Alternative Technical Concepts Submittal Form

Project: I-20 over Wateree River Bridge Replacement **Project ID:** 2847360

ATC No.: 5 **Priority:** High **Team:** Crowder Construction/RK&K **Date:** 12/2/22

Costs (required):

Reducing superelevation emax to 4% for temporary alignments during construction staging, reduces pavement cross slope transitions and therefore pavement removal\reconstruction and slope correction.
Total initial (construction) savings estimated = $500,000

Quality:

No adverse impact to quality or performance with the implementation of this ATC.

Operations & Maintenance:

No impact to long-term operation is anticipated with this ATC.

Post Office Box 191
Columbia, South Carolina 29202-0191

Phone: (803) 737-2314
TTY: (803) 737-3870

AN EQUAL OPPORTUNITY
AFFIRMATIVE ACTION EMPLOYER

Table 3-8. Minimum Radii for Design Superelevation Rates, Design Speeds, and e_{max} = 4%

Metric									
	V_d = 20 km/h	V_d = 30 km/h	V_d = 40 km/h	V_d = 50 km/h	V_d = 60 km/h	V_d = 70 km/h	V_d = 80 km/h	V_d = 90 km/h	V_d = 100 km/h
e (%)	*R* (m)	*R* (m)	*R* (m)	*R* (m)	*R* (m)	*R* (m)	*R* (m)	*R* (m)	*R* (m)
NC	163	371	679	951	1310	1740	2170	2640	3250
RC	102	237	441	632	877	1180	1490	1830	2260
2.2	75	187	363	534	749	1020	1290	1590	1980
2.4	51	132	273	435	626	865	1110	1390	1730
2.6	38	99	209	345	508	720	944	1200	1510
2.8	30	79	167	283	422	605	802	1030	1320
3.0	24	64	137	236	356	516	690	893	1150
3.2	20	54	114	199	303	443	597	779	1010
3.4	17	45	96	170	260	382	518	680	879
3.6	14	38	81	144	222	329	448	591	767
3.8	12	31	67	121	187	278	381	505	658
4.0	8	22	47	86	135	203	280	375	492

Note: Use of e_{max} = 4% should be limited to urban conditions.

U.S. Customary										
	V_d = 15 mph	V_d = 20 mph	V_d = 25 mph	V_d = 30 mph	V_d = 35 mph	V_d = 40 mph	V_d = 45 mph	V_d = 50 mph	V_d = 55 mph	V_d = 60 mph
e (%)	*R* (ft)	*R* (ft)	*R* (ft)	*R* (ft)	*R* (ft)	*R* (ft)	*R* (ft)	*R* (ft)	*R* (ft)	*R* (ft)
NC	796	1410	2050	2830	3730	4770	5930	7220	8650	10300
RC	506	902	1340	1880	2490	3220	4040	4940	5950	7080
2.2	399	723	1110	1580	2120	2760	3480	4280	5180	6190
2.4	271	513	838	1270	1760	2340	2980	3690	4500	5410
2.6	201	388	650	1000	1420	1930	2490	3130	3870	4700
2.8	157	308	524	817	1170	1620	2100	2660	3310	4060
3.0	127	251	433	681	982	1370	1800	2290	2860	3530
3.2	105	209	363	576	835	1180	1550	1980	2490	3090
3.4	88	175	307	490	714	1010	1340	1720	2170	2700
3.6	73	147	259	416	610	865	1150	1480	1880	2350
3.8	61	122	215	348	512	730	970	1260	1600	2010
4.0	42	86	154	250	371	533	711	926	1190	1500

Note: Use of e_{max} = 4% should be limited to urban conditions.

Formal Alternative Technical Concepts Submittal Form

Project: I-20 over Wateree River Bridge Replacement **Project ID:** 2847360

ATC No.: 8 **Priority:** Med **Team:** Crowder Construction/RK&K **Date:**

Description (required):

This ATC seeks to use a minimum offset distance less than 10 feet between centerline of proposed bent and centerline of existing pile bents. A minimum of 5 feet clear would be maintained between existing substructure elements and new substructure elements.

Usage:

Our team is proposing to decrease the pile bent spacing to less than 10 feet at the beginning and end of bridge. However, a minimum of 5 feet clear longitudinally would be held between existing 16" prestressed concrete piles and proposed steel H piles. A preliminary foundation layout is provided to show how this would be achieved. If ATC 7 is used, this ATC would not be used.

Deviations (required):

This ATC would deviate from Section 2.1.19 of the RFP that limits centerline spacing of pile bents to 10 feet.

Justification:

Our team understands the intent of the 10 feet offset requirement was due to constructibility with existing foundations. However, our team is equipped to handle the construction if a 5 feet clearance is maintained between existing and proposed foundations. This allows our proposed structure to eliminate one span from the concept design. The attached plan sheets provide the preliminary layout for the proposed piles, and the minimum distance between the existing piles and the proposed piles. This preliminary layout is shown in the center of the existing median which is predicated on approval of ATC 1, however the same minimum spacing concept would be used for this ATC in the event ATC 1 is not approved.

Schedule:

This ATC could create a reduction in the schedule by 6 weeks, 3 weeks per bridge, due to reduce substructure construction

Impacts:

No adverse impacts are expected with the implementation of this ATC.

History:

Crowder construction has a history of success when working close to existing bridge elements with 5 feet of clearance.

Risks:

No risks to SCDOT or others are anticipated.

Costs (required):

This ATC could be a cost savings on superstructure and allowing substructure by optimizing span arrangements and less substructure construction by approximately $750,000.

Post Office Box 191
Columbia, South Carolina 29202-0191

Phone: (803) 737-2314
TTY: (803) 737-3870

AN EQUAL OPPORTUNITY
AFFIRMATIVE ACTION EMPLOYER

Formal Alternative Technical Concepts Submittal Form

Project: I-20 over Wateree River Bridge Replacement **Project ID:** 2847360

ATC No.: 8 **Priority:** Med **Team:** Crowder Construction/RK&K **Date:** 12/2/22

Quality:

No adverse impact to quality or performance with the implementation of this ATC.

Operations & Maintenance:

No impact to long-term operation and maintenance is anticipated with this ATC.

Post Office Box 191
Columbia, South Carolina 29202-0191

Phone: (803) 737-2314
TTY: (803) 737-3870

AN EQUAL OPPORTUNITY
AFFIRMATIVE ACTION EMPLOYER

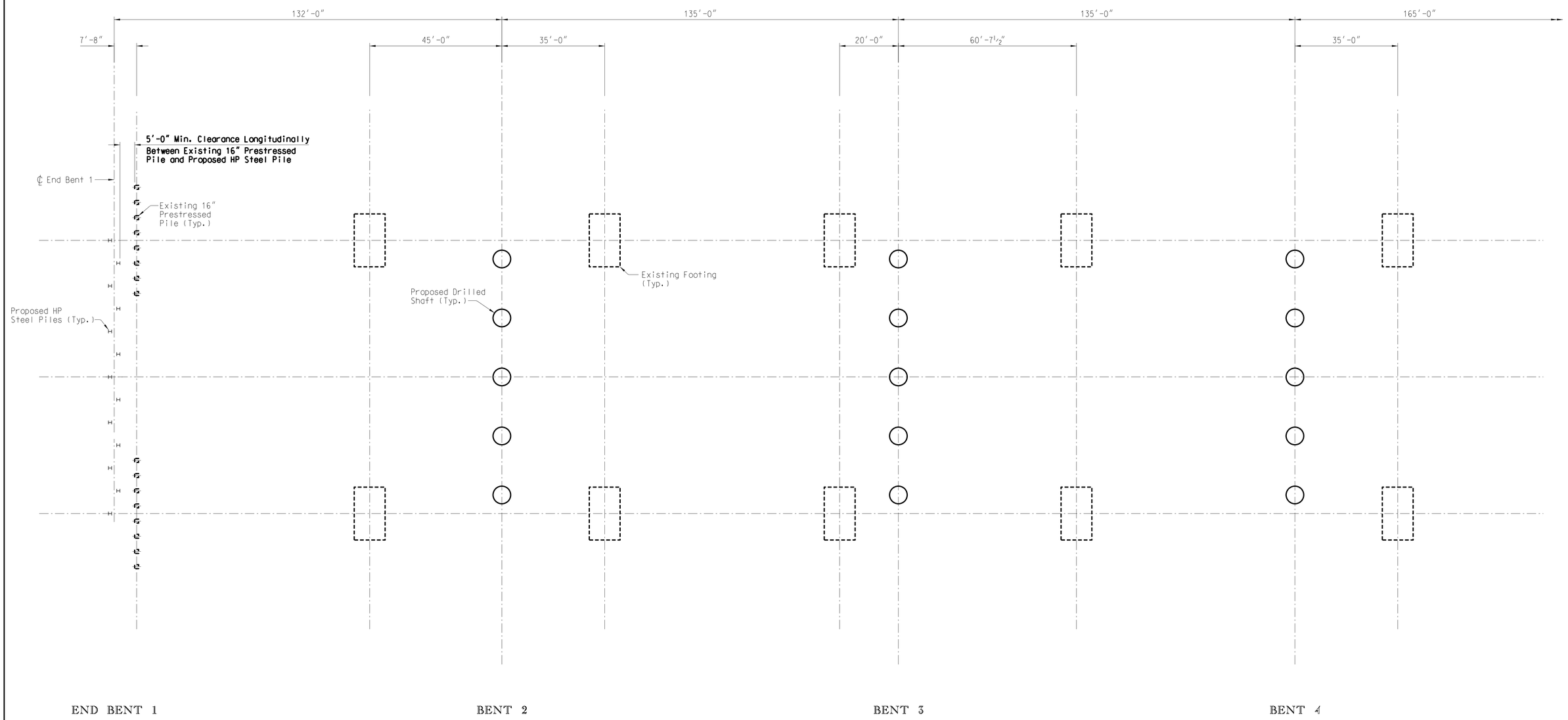

REV.			
REV.			
REV.			
REVIEWED			
QUAN.			
DR.	TKB	KSH	10-22
DES.			
	BY	CHK.	DATE

SOUTH CAROLINA
DEPARTMENT OF TRANSPORTATION

ATC 8
PRELIMINARY
FOUNDATION LAYOUT
(1 of 2)

COUNTY	ROUTE
KERSHAW	I-20

SOUTH CAROLINA
RUMMEL
KLEPPER
KAHL LLP
No. 334
CERTIFICATE OF AUTHORIZATION

11/1/2022 5:52:21 PM

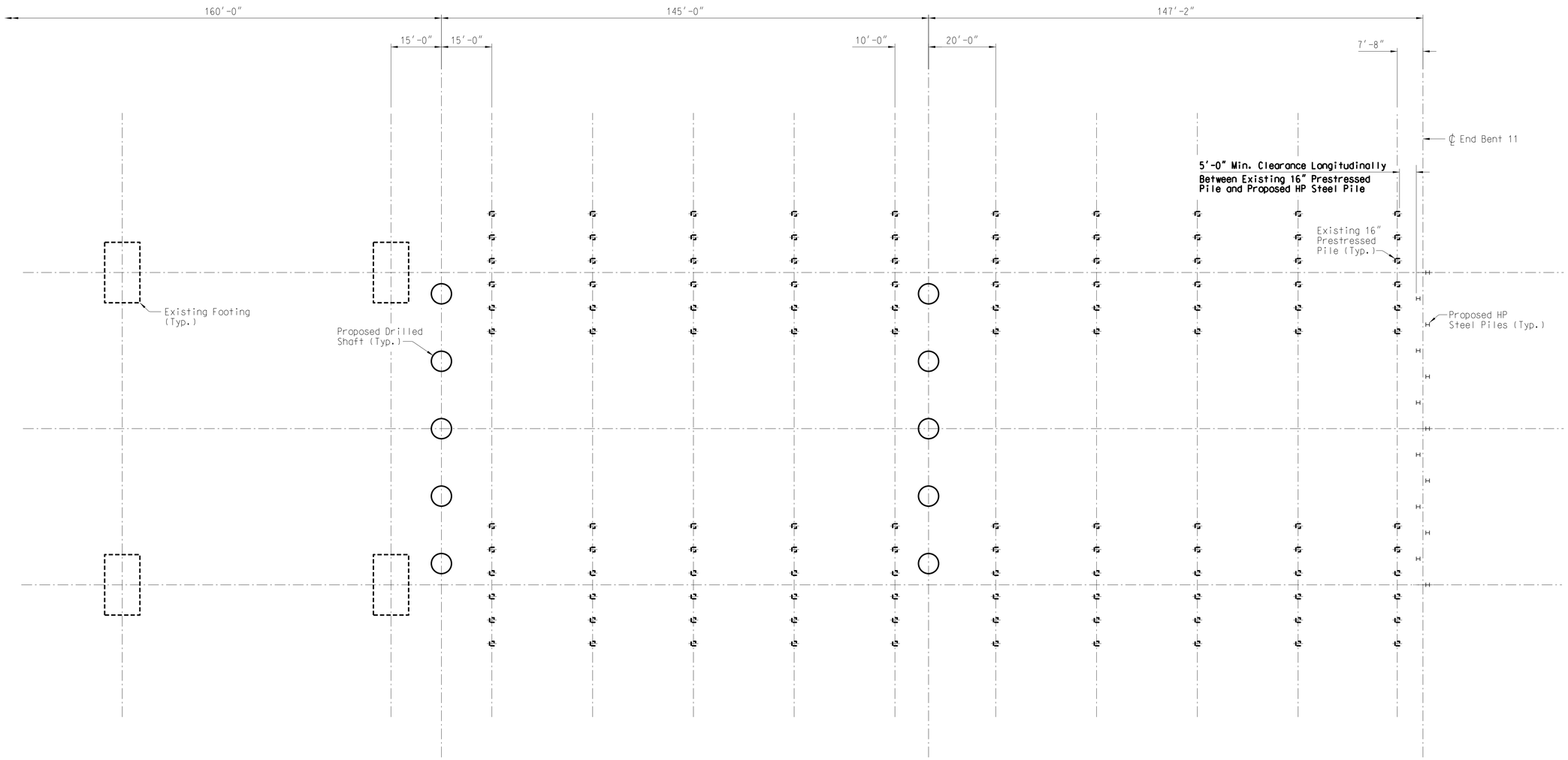

SOUTH CAROLINA
RUMMEL
KLEPPER
KAHL LLP
No. 334
CERTIFICATE OF AUTHORIZATION

REV.			
REV.			
REV.			
REVIEWED			
QUAN.			
DR.	TKB	KSH	10-22
DES.			
	BY	CHK.	DATE

CROWDER 75 YEARS 1947 2022

RK&K

SOUTH CAROLINA
DEPARTMENT OF TRANSPORTATION

ATC 8
PRELIMINARY
FOUNDATION LAYOUT
(2 of 2)

COUNTY: KERSHAW

ROUTE: I-20

11/1/2022 5:53:44 PM

Formal Alternative Technical Concepts Submittal Form

Project: I-20 over Wateree River Bridge Replacements **Project ID:** 2847360

ATC No.: 11 **Priority:** High **Team:** Crowder Construction/RK&K **Date:** 1/12/23

Description (required):

This ATC proposes to shift the new I-20 WB bridge over the Wateree River off of existing alignment and build the bridge in two-phases using a temporary median bridge over Wateree Farm Pond. The new I-20 EB bridge will be constructed on new alignment to match what is shown in the SCDOT conceptual plans and will be constructed in a single phase.

The proposed I-20 WB structure will provide two – 12' travel lanes with a 10' inside shoulder and a 24' outside shoulder (the 24' shoulder provides 12' for a future third travel lane and a 12' outside shoulder). The proposed I-20 EB structure will provide two – 12' travel lanes with a 10' inside shoulder and a 12' outside shoulder.

Usage:

Building the WB bridge in two phases and the EB bridge in a single phase reduces construction time and the number of temporary traffic shifts to only one shift EB and one shift WB. This approach will reduce costs and improve the safety of the traveling public through the work zone due to the minimal number of traffic shifts and reduced construction time.

A quantitative traffic safety analysis using the Interactive Highway Safety Design Model (IHSDM) is included with this ATC. Travel crash rates (crashes per million vehicle miles traveled) was the selected Measure of Effectiveness (MOE) to compare the alternatives. Based on the data provided in Table 1 of the Safety Analysis, Travel Crash Rates for the SCDOT conceptual plans and ATC 11 are the same, indicative of equal crash performance between the two.

Deviations (required):

Per section 3.8.c of the RFP, "any shift in the preferred alternative outside the proposed right of way limits presented in the document will require submittal and approval of an ATC to be eligible for implementation."

This ATC will require the use of ATC 5 which utilizes the AASHTO superelevation table with an emax of 4% for temporary staging alignments only, while still meeting the Vd of 60 mph allowed by the RFP.

All curves on the east end of the Wateree River bridges will meet the RFP requirements for both design speed and superelevation.

Justification:

Approval of this ATC will allow the Crowder team to build replacement bridges with a shortened construction schedule at a reduced cost to SCDOT and with improved safety for the traveling public.

Schedule:

Overall, we anticipate reducing the construction schedule by 12 months as compared to the SCDOT conceptual plans if this ATC is approved.

A schedule highlighting the permitting and ROW acquisition activities has been developed and is attached to this ATC. We anticipate the RFC Submittal will control the critical path. All permitting and ROW impacts have been reviewed and are shown on the schedule. There will be no impact to SCDHEC regulated dams, therefore a SCDHEC permitting process will not be necessary.

Post Office Box 191
Columbia, South Carolina 29202-0191

Phone: (803) 737-2314
TTY: (803) 737-3870

AN EQUAL OPPORTUNITY
AFFIRMATIVE ACTION EMPLOYER

Formal Alternative Technical Concepts Submittal Form

Project: I-20 over Wateree River Bridge Replacements **Project ID:** 2847360

ATC No.: 11 **Priority:** High **Team:** Crowder Construction/RK&K **Date:** 1/12/23

Impacts:

The proposed relocated WB centerline will require 1.86 acres of additional Right-of-Way. There will be no additional wetland impacts, and as such no additional update to NEPA and FEMA documentation will be needed.

History:

Phased bridge construction has been used in many locations around the country and within South Carolina, and is a proven economical method for major bridge replacements on high volume roadways.

Risks:

No additional risks are associated with this ATC.

Costs (required):

We anticipate a $5 Million net savings to the project if this ATC is approved. A majority of the cost savings achieved by eliminating the $10 million temporary median river bridge are added back with a temporary median pond bridge for MOT, and the additional 12 feet of WB bridge width over and above the minimum required width. We also estimate the 1.86 acres of additional right of way to cost approximately $7,000 per acre (a total of $13,020).

Quality:

SCDOT will get two new bridges with the WB bridge able to accommodate a future third 12' travel lane to tie with future widening of I-20, at a significant cost savings over the conceptual design and with a shorter construction time.

Operations & Maintenance:

No adverse impact to operations and maintenance with the implementation of this ATC.

Post Office Box 191
Columbia, South Carolina 29202-0191

Phone: (803) 737-2314
TTY: (803) 737-3870

AN EQUAL OPPORTUNITY
AFFIRMATIVE ACTION EMPLOYER

Maintenance

of Traffic

Staging & Geopak

Data

NO.	DATE	BY	DESCRIPTION OF REVISION
4			
3			
2			
1			

RK&K

SCDOT

PRELIMINARY - PLANS

US BRIDGE OVER WATEREE
STANDS (NORTHERN SHIFT)

BR. DEP. CNB. FOR. CONSTRUCTION

SCALE: 1" = 50'

INDEX
EXISTING ROAD
REMOVED
PROPOSED DESIGN
PROPOSED R-O-W
CEMETERY
STAGE 2
REMOVE AND REPLACE EB BRIDGE ON SCDOT CONCEPTUAL PLAN ALIGNMENT
Temporary Median Pond Bridge
Temporary Bridge
Temporary Fill Limits
RK&K
SCDOT
PRELIMINARY - PLANS
I-20 BRIDGE OVER WACCAMAW
STAGED (NORTHERN SHIFT)
NO. DATE DESCRIPTION OF REVISION
NO SHIP, USE FOR CONSTRUCTION
SCALE: 1" = 50'

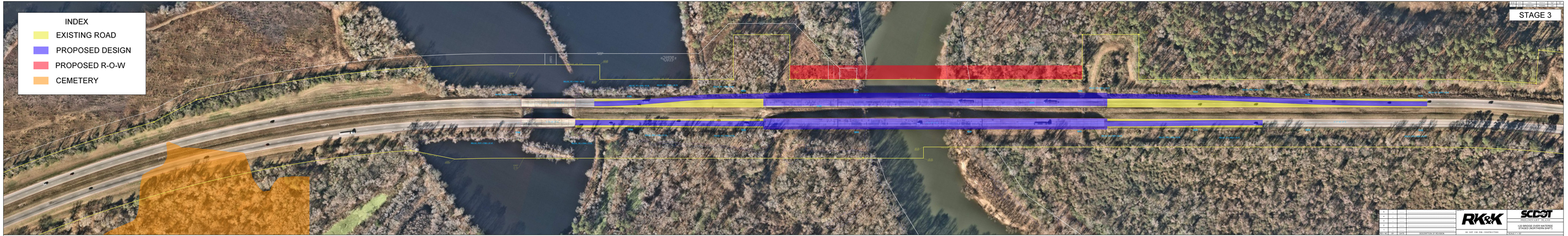

NO.	DATE	BY	DESCRIPTION OF REVISION
4			
3			
2			
1			
0			

RK&K

SCDOT

PRELIMINARY - PLANS

I-20 BRIDGE OVER WACCAMAW
STAGED (NORTHERN SHIFT)

DO NOT USE FOR CONSTRUCTION

SCALE: 1" = 50'

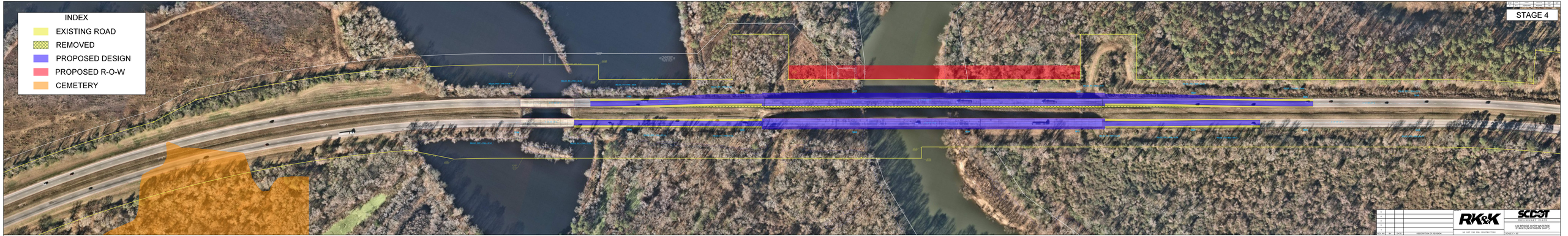

NO.	DATE	BY	DESCRIPTION OF REVISION
4			
3			
2			
1			
0			AS SUBT. CNS. FOR CONSTRUCTION

RK&K

SCDOT

PRELIMINARY - PLANS

I-20 BRIDGE OVER WACCAMAW
STAGED (NORTHERN SHIFT)

SCALE: 1" = 50'

Copyright: (c) 2013 Bentley Systems, Incorporated. All rights reserved.
Project:
Subject:
Job No. I20 Operator: ZW
Date: Thursday January 19, 2023 11:52 am

SYSTEM FIX 2 ASEC 2 BEAR PRI 0 RED NE STA 2 FILE: 'A_PHASE1_WB_'

* 1 Des Cha Phase1_WB

Chain PHASE1_WB contains:
 35000 35001 35002 35003

Beginning chain PHASE1_WB description
==========

Point 35000 N 867,416.86 E 2,110,921.31 Sta 1797+99.95

Course from 35000 to 35001 N 75° 24' 38.09" E Dist 300.00

Point 35001 N 867,492.43 E 2,111,211.64 Sta 1800+99.95

Course from 35001 to 35002 N 75° 09' 18.78" E Dist 1,499.62

Point 35002 N 867,876.64 E 2,112,661.21 Sta 1815+99.57

Course from 35002 to 35003 N 74° 53' 59.54" E Dist 300.03

Point 35003 N 867,954.79 E 2,112,950.88 Sta 1818+99.60

==========
Ending chain PHASE1_WB description

Copyright: (c) 2013 Bentley Systems, Incorporated. All rights reserved.
Project:
Subject:
Job No. I20 Operator: ZW
Date: Thursday January 19, 2023 11:52 am

SYSTEM FIX 2 ASEC 2 BEAR PRI 0 RED NE STA 2 FILE: 'A_PHASE2_EB'

* 1 Des Cha Phase2_EB

Chain PHASE2_EB contains:
 3150 CUR PHASE2_EB1 CUR PHASE2_EB2 CUR PHASE2_EB3 CUR PHASE2_EB4 3151

Beginning chain PHASE2_EB description
==========

Point 3150 N 866,629.48 E 2,108,873.83 Sta 1775+97.50

Course from 3150 to PC PHASE2_EB1 N 61° 51' 20.06" E Dist 379.32

Curve Data

Curve PHASE2_EB1
P.I. Station 1784+43.16 N 867,028.37 E 2,109,619.50
Delta = 13° 17' 58.72" (RT)
Degree = 1° 25' 56.62"
Tangent = 466.34
Length = 928.49
Radius = 4,000.00
External = 27.09
Long Chord = 926.41
Mid. Ord. = 26.91

D.S.	=	60 mph
eMax	=	8.0%
e	=	4.0%
LG - PC	=	0.5%
LG - PT	=	0.5%

P.C. Station 1779+76.82 N 866,808.40 E 2,109,208.30
P.T. Station 1789+05.31 N 867,147.85 E 2,110,070.27
C.C. N 863,281.35 E 2,111,095.08
Back = N 61° 51' 20.06" E
Ahead = N 75° 09' 18.78" E
Chord Bear = N 68° 30' 19.42" E

Course from PT PHASE2_EB1 to PC PHASE2_EB2 N 75° 09' 18.78" E Dist 436.97

Curve Data

Curve PHASE2_EB2
P.I. Station 1794+58.80 N 867,289.65 E 2,110,605.29
Delta = 5° 43' 32.59" (LT)
Degree = 2° 27' 32.57"
Tangent = 116.52
Length = 232.84
Radius = 2,330.00
External = 2.91
Long Chord = 232.75
Mid. Ord. = 2.91

D.S.	=	60 mph
eMax	=	4.0%
e	=	3.6%
LG - PC	=	0.5%
LG - PT	=	0.5%

P.C. Station 1793+42.28 N 867,259.80 E 2,110,492.66
P.T. Station 1795+75.12 N 867,330.59 E 2,110,714.38
C.C. N 869,512.03 E 2,109,895.71
Back = N 75° 09' 18.78" E
Ahead = N 69° 25' 46.19" E
Chord Bear = N 72° 17' 32.48" E

Course from PT PHASE2_EB2 to PC PHASE2_EB3 N 69° 25' 46.19" E Dist 174.54

Curve Data

Curve PHASE2_EB3
P.I. Station 1798+66.19 N 867,432.86 E 2,110,986.88
Delta = 5° 43' 32.59" (RT)

```
Degree      =       2° 27' 32.57"
Tangent     =              116.52
Length      =              232.84
Radius      =            2,330.00
External    =                2.91
Long Chord  =              232.75
Mid. Ord.   =                2.91
P.C.  Station          1797+49.67  N          867,391.92  E        2,110,877.79
P.T.  Station          1799+82.51  N          867,462.71  E        2,111,099.51
C.C.                               N          865,210.48  E        2,111,696.46
Back        = N  69° 25' 46.19" E
Ahead       = N  75° 09' 18.78" E
Chord Bear  = N  72° 17' 32.48" E
```

D.S.	=	60 mph
eMax	=	4.0%
e	=	3.6%
LG - PC	=	0.5%
LG - PT	=	0.5%

```
Course from PT PHASE2_EB3 to PC PHASE2_EB4 N 75° 09' 18.78" E Dist 1,743.64

                                   Curve Data
                                  *----------*
Curve PHASE2_EB4
P.I.  Station          1823+62.63  N          868,072.50  E        2,113,400.19
Delta       =       5° 01' 36.36" (RT)
Degree      =       0° 23' 42.52"
Tangent     =              636.48
Length      =            1,272.14
Radius      =           14,500.00
External    =               13.96
Long Chord  =            1,271.73
Mid. Ord.   =               13.95
P.C.  Station          1817+26.16  N          867,909.44  E        2,112,784.96
P.T.  Station          1829+98.29  N          868,181.03  E        2,114,027.35
C.C.                               N          853,893.40  E        2,116,499.88
Back        = N  75° 09' 18.78" E
Ahead       = N  80° 10' 55.13" E
Chord Bear  = N  77° 40' 06.96" E
```

D.S.	=	70 mph
eMax	=	8.0%
e	=	N.C.
LG - PC	=	N/A
LG - PT	=	N/A

```
Course from PT PHASE2_EB4 to 3151 N 80° 10' 55.13" E Dist 556.59

Point 3151            N       868,275.94 E     2,114,575.79 Sta    1835+54.89

==============================================================================
Ending chain PHASE2_EB description
```

Copyright: (c) 2013 Bentley Systems, Incorporated. All rights reserved.
Project:
Subject:
Job No. I20 Operator: ZW
Date: Thursday January 19, 2023 11:53 am

SYSTEM FIX 2 ASEC 2 BEAR PRI 0 RED NE STA 2 FILE: 'A_PHASE2_WB_'

* 1 Des Cha Phase2_WB

Chain PHASE2_WB contains:
 3200 CUR PHASE2_WB1 CUR PHASE2_WB2 CUR PHASE2_WB3 CUR PHASE2_WB4

Beginning chain PHASE2_WB description
==========

Point 3200 N 867,215.62 E 2,110,162.05 Sta 1790+14.48

Course from 3200 to PC PHASE2_WB1 N 75° 09' 18.78" E Dist 324.34

Curve Data

Curve PHASE2_WB1
P.I. Station 1794+65.04 N 867,331.06 E 2,110,597.57
Delta = 4° 57' 00.39" (LT)
Degree = 1° 57' 43.86"
Tangent = 126.22
Length = 252.28
Radius = 2,920.00
External = 2.73
Long Chord = 252.20
Mid. Ord. = 2.72

D.S.	=	60 mph
eMax	=	4.0%
e	=	3.4%
LG - PC	=	0.5%
LG - PT	=	0.5%

P.C. Station 1793+38.82 N 867,298.72 E 2,110,475.57
P.T. Station 1795+91.10 N 867,373.80 E 2,110,716.33
C.C. N 870,121.26 E 2,109,727.46
Back = N 75° 09' 18.78" E
Ahead = N 70° 12' 18.39" E
Chord Bear = N 72° 40' 48.58" E

Course from PT PHASE2_WB1 to PC PHASE2_WB2 N 70° 12' 18.39" E Dist 137.69

Curve Data

Curve PHASE2_WB2
P.I. Station 1798+55.00 N 867,463.17 E 2,110,964.64
Delta = 4° 57' 00.39" (RT)
Degree = 1° 57' 43.86"
Tangent = 126.22
Length = 252.28
Radius = 2,920.00
External = 2.73
Long Chord = 252.20
Mid. Ord. = 2.72

D.S.	=	60 mph
eMax	=	4.0%
e	=	3.4%
LG - PC	=	0.5%
LG - PT	=	0.5%

P.C. Station 1797+28.79 N 867,420.43 E 2,110,845.88
P.T. Station 1799+81.06 N 867,495.51 E 2,111,086.65
C.C. N 864,672.97 E 2,111,834.75
Back = N 70° 12' 18.39" E
Ahead = N 75° 09' 18.78" E
Chord Bear = N 72° 40' 48.58" E

Course from PT PHASE2_WB2 to PC PHASE2_WB3 N 75° 09' 18.78" E Dist 1,651.65

Curve Data

Curve PHASE2_WB3
P.I. Station 1819+82.14 N 868,008.19 E 2,113,020.94
Delta = 2° 45' 39.37" (RT)

```
Degree      =       0° 23' 42.52"
Tangent     =              349.43
Length      =              698.72
Radius      =           14,500.00
External    =                4.21
Long Chord  =              698.65
Mid. Ord.   =                4.21
P.C.  Station          1816+32.71  N          867,918.67  E        2,112,683.17
P.T.  Station          1823+31.43  N          868,081.34  E        2,113,362.62
C.C.                               N          853,902.63  E        2,116,398.09
Back        = N  75° 09' 18.78" E
Ahead       = N  77° 54' 58.15" E
Chord Bear  = N  76° 32' 08.46" E
```

```
D.S.      =    70 mph
eMax      =    8.0%
e         =    N.C.
LG - PC   =    N/A
LG - PT   =    N/A
```

```
                                  Curve Data
                                 *----------*
Curve PHASE2_WB4
P.I.  Station          1826+80.86  N          868,154.49  E        2,113,704.30
Delta       =       2° 45' 39.37" (LT)
Degree      =       0° 23' 42.52"
Tangent     =              349.43
Length      =              698.72
Radius      =           14,500.00
External    =                4.21
Long Chord  =              698.65
Mid. Ord.   =                4.21
P.C.  Station          1823+31.43  N          868,081.34  E        2,113,362.62
P.T.  Station          1830+30.15  N          868,244.01  E        2,114,042.07
C.C.                               N          882,260.05  E        2,110,327.15
Back        = N  77° 54' 58.15" E
Ahead       = N  75° 09' 18.78" E
Chord Bear  = N  76° 32' 08.46" E
```

```
D.S.      =    70 mph
eMax      =    8.0%
e         =    N.C.
LG - PC   =    N/A
LG - PT   =    N/A
```

```
==============================================================================
Ending chain PHASE2_WB description
```

Copyright: (c) 2013 Bentley Systems, Incorporated. All rights reserved.
Project:
Subject:
Job No. I20 Operator: ZW
Date: Thursday January 19, 2023 11:51 am

SYSTEM FIX 2 ASEC 2 BEAR PRI 0 RED NE STA 2 FILE: 'A_I20_EB_REL_'

* 1 Des Cha I20_EB_REL

Chain I20_EB_REL contains:
 EB001 CUR I20_EB_REL_1 CUR I20_EB_REL_2 CUR I20_EB_REL_3 CUR I20_EB_REL_4 EB002

Beginning chain I20_EB_REL description
==========

Point EB001 N 867,112.13 E 2,110,099.47 Sta 1789+27.47

Course from EB001 to PC I20_EB_REL_1 N 75° 09' 18.78" E Dist 450.04

Curve Data

Curve I20_EB_REL_1
P.I. Station 1795+27.52 N 867,265.87 E 2,110,679.49
Delta = 0° 51' 34.00" (RT)
Degree = 0° 17' 11.32"
Tangent = 150.00
Length = 300.00
Radius = 20,000.00
External = 0.56
Long Chord = 300.00
Mid. Ord. = 0.56
P.C. Station 1793+77.51 N 867,227.44 E 2,110,534.49
P.T. Station 1796+77.52 N 867,302.12 E 2,110,825.04
C.C. N 847,894.97 E 2,115,658.52
Back = N 75° 09' 18.78" E
Ahead = N 76° 00' 52.78" E
Chord Bear = N 75° 35' 05.78" E

Curve Data

Curve I20_EB_REL_2
P.I. Station 1798+27.52 N 867,338.37 E 2,110,970.60
Delta = 0° 51' 34.00" (LT)
Degree = 0° 17' 11.32"
Tangent = 150.00
Length = 300.00
Radius = 20,000.00
External = 0.56
Long Chord = 300.00
Mid. Ord. = 0.56
P.C. Station 1796+77.52 N 867,302.12 E 2,110,825.04
P.T. Station 1799+77.52 N 867,376.80 E 2,111,115.60
C.C. N 886,709.27 E 2,105,991.57
Back = N 76° 00' 52.78" E
Ahead = N 75° 09' 18.78" E
Chord Bear = N 75° 35' 05.78" E

Course from PT I20_EB_REL_2 to PC I20_EB_REL_3 N 75° 09' 18.78" E Dist 1,714.87

Curve Data

Curve I20_EB_REL_3
P.I. Station 1818+26.98 N 867,850.64 E 2,112,903.33
Delta = 0° 57' 28.45" (LT)
Degree = 0° 21' 21.15"
Tangent = 134.59

```
Length      =             269.17
Radius      =          16,100.00
External    =               0.56
Long Chord  =             269.17
Mid. Ord.   =               0.56
P.C.  Station         1816+92.39  N          867,816.16  E        2,112,773.24
P.T.  Station         1819+61.56  N          867,887.29  E        2,113,032.83
C.C.                              N          883,378.79  E        2,108,648.39
Back        = N  75° 09' 18.78" E
Ahead       = N  74° 11' 50.33" E
Chord Bear  = N  74° 40' 34.55" E

                                   Curve Data
                                  *----------*
Curve I20_EB_REL_4
P.I.  Station         1820+96.15  N          867,923.94  E        2,113,162.33
Delta       =       0° 57' 28.45" (RT)
Degree      =       0° 21' 21.15"
Tangent     =             134.59
Length      =             269.17
Radius      =          16,100.00
External    =               0.56
Long Chord  =             269.17
Mid. Ord.   =               0.56
P.C.  Station         1819+61.56  N          867,887.29  E        2,113,032.83
P.T.  Station         1822+30.73  N          867,958.42  E        2,113,292.43
C.C.                              N          852,395.78  E        2,117,417.27
Back        = N  74° 11' 50.33" E
Ahead       = N  75° 09' 18.78" E
Chord Bear  = N  74° 40' 34.55" E

Course from PT I20_EB_REL_4 to EB002 N 75° 09' 18.78" E Dist 823.53

Point EB002           N       868,169.41 E     2,114,088.47 Sta    1830+54.25

==============================================================================
Ending chain I20_EB_REL description
```

Copyright: (c) 2013 Bentley Systems, Incorporated. All rights reserved.
Project:
Subject:
Job No. I20 Operator: ZW
Date: Thursday January 19, 2023 11:52 am

SYSTEM FIX 2 ASEC 2 BEAR PRI 0 RED NE STA 2 FILE: 'A_I20_WB_REL_'

* 1 Des Cha I20_WB_REL

Chain I20_WB_REL contains:
 3300 CUR I20_WB_REL1 CUR I20_WB_REL2 CUR I20_WB_REL3 CUR I20_WB_REL4 3301

Beginning chain I20_WB_REL description
==========

Point 3300 N 867,215.62 E 2,110,162.05 Sta 1790+14.48

Course from 3300 to PC I20_WB_REL1 N 75° 09' 18.78" E Dist 312.34

Curve Data

Curve I20_WB_REL1
P.I. Station 1794+38.11
Delta = 1° 38' 20.85" (LT)
Degree = 0° 44' 11.22"
Tangent = 111.29
Length = 222.57
Radius = 7,780.00
External = 0.80
D.S. = 75 mph
eMax = 8.0%
e = 3.2%
P.C. LG% = 0.50%
P.T. LG% = 0.50%

	LT(HIGH)	RT(LOW)
Begin S.E.	1792+99	1792+55
P.C.	1793+27	1793+27
Begin Max S.E.	1793+53	1793+53
End Max S.E	1795+23	1795+23
P.T.	1795+49	1795+49
END SE	1795+51	1796+47

Long Chord = 222.56
Mid. Ord. = 0.80
P.C. Station 1793+26.82 N 867,295.65 E 2,110,463.97
P.T. Station 1795+49.39 N 867,355.74 E 2,110,678.27
C.C. N 874,815.98 E 2,108,470.72
Back = N 75° 09' 18.78" E
Ahead = N 73° 30' 57.93" E
Chord Bear = N 74° 20' 08.35" E

Course from PT I20_WB_REL1 to PC I20_WB_REL2 N 73° 30' 57.93" E Dist 220.11

Curve Data

Curve I20_WB_REL2
P.I. Station 1798+80.79 N 867,449.77 E 2,110,996.05
Delta = 1° 38' 20.85" (RT)
Degree = 0° 44' 11.22"
Tangent = 111.29
Length = 222.57
Radius = 7,780.00
External = 0.80
D.S. = 75 mph
eMax = 8.0%

```
e           =                3.2%
P.C. LG%    =               0.50%
P.T. LG%    =               0.50%

                LT(HIGH)   RT(LOW)
Begin S.E.      1796+72    1797+68
P.C.            1797+70    1797+70
Begin Max S.E.  1797+96    1797+96
End Max S.E     1799+66    1799+66
P.T.            1799+92    1799+92
END SE          1800+90    1799+94

Long Chord  =              222.56
Mid. Ord.   =                0.80
P.C.  Station          1797+69.50  N          867,418.19  E        2,110,889.33
P.T.  Station          1799+92.07  N          867,478.29  E        2,111,103.63
C.C.                               N          859,957.96  E        2,113,096.87
Back        = N  73° 30' 57.93" E
Ahead       = N  75° 09' 18.78" E
Chord Bear  = N  74° 20' 08.35" E

Course from PT I20_WB_REL2 to PC I20_WB_REL3 N 75° 09' 18.78" E Dist 1,639.65

                                    Curve Data
                                   *----------*
Curve I20_WB_REL3
P.I.  Station          1818+57.51  N          867,956.21  E        2,112,906.80
Delta       =       1° 36' 24.86" (RT)
Degree      =       0° 21' 21.15"
Tangent     =              225.78
Length      =              451.54
Radius      =           16,100.00
External    =                1.58
D.S.        =              75 mph
eMax        =                8.0%
e           =                N.C.
P.C. LG%    =                N/A
P.T. LG%    =                N/A

Long Chord  =              451.52
Mid. Ord.   =                1.58
P.C.  Station          1816+31.72  N          867,898.37  E        2,112,688.55
P.T.  Station          1820+83.26  N          868,007.92  E        2,113,126.58
C.C.                               N          852,335.73  E        2,116,813.40
Back        = N  75° 09' 18.78" E
Ahead       = N  76° 45' 43.64" E
Chord Bear  = N  75° 57' 31.21" E

                                    Curve Data
                                   *----------*
Curve I20_WB_REL4
P.I.  Station          1823+09.05  N          868,059.62  E        2,113,346.37
Delta       =       1° 36' 24.86" (LT)
Degree      =       0° 21' 21.15"
Tangent     =              225.78
Length      =              451.54
Radius      =           16,100.00
External    =                1.58
D.S.        =              75 mph
eMax        =                8.0%
e           =                N.C.
P.C. LG%    =                N/A
P.T. LG%    =                N/A

Long Chord  =              451.52
Mid. Ord.   =                1.58
P.C.  Station          1820+83.26  N          868,007.92  E        2,113,126.58
P.T.  Station          1825+34.80  N          868,117.47  E        2,113,564.62
C.C.                               N          883,680.10  E        2,109,439.77
```

```
Back        = N  76° 45' 43.64" E
Ahead       = N  75° 09' 18.78" E
Chord Bear  = N  75° 57' 31.21" E

Course from PT I20_WB_REL4 to 3301 N 75° 09' 18.78" E Dist 493.94

Point 3301            N       868,244.01 E     2,114,042.07 Sta    1830+28.74

================================================================================
Ending chain I20_WB_REL description
```

Bridge

Construction

Staging

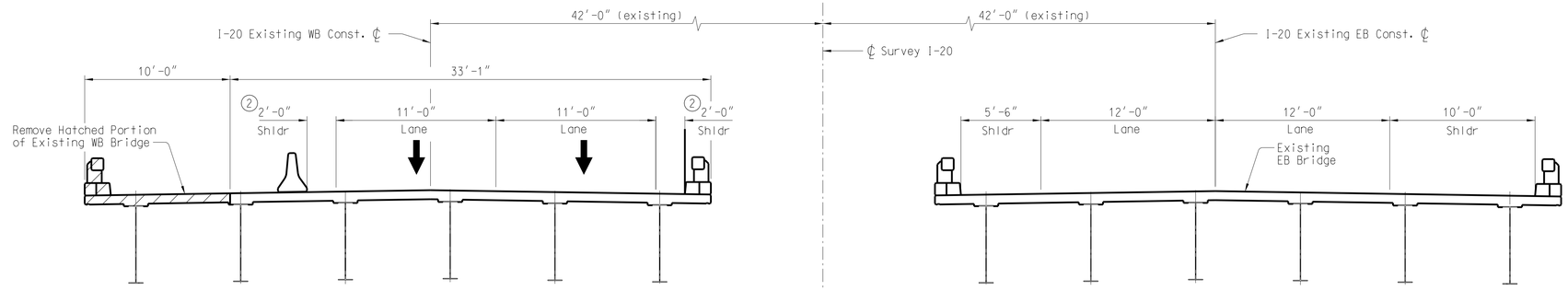

STAGE 1

Remove portion of Westbound Bridge

Rolled Beams in Spans 1-4 and 6-8 shown.
See note (1) for additional information.

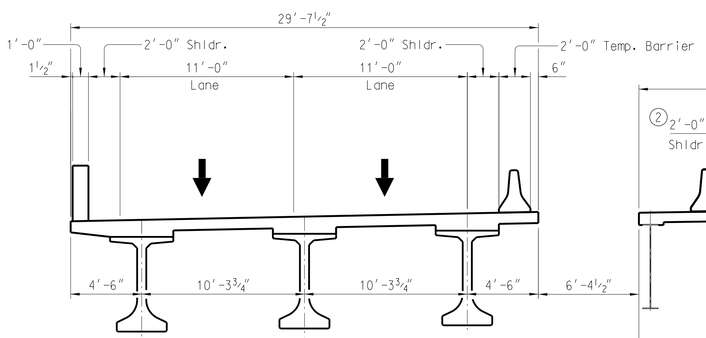

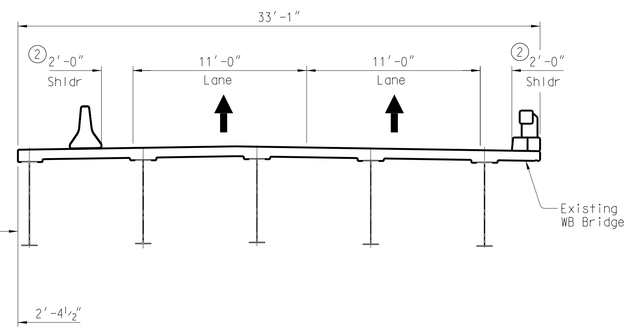

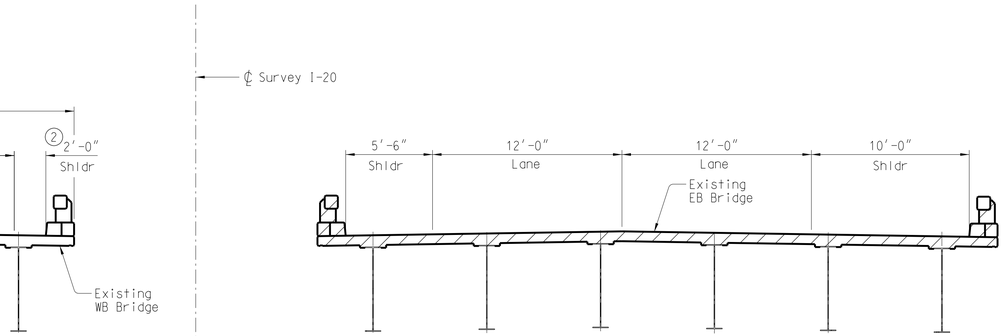

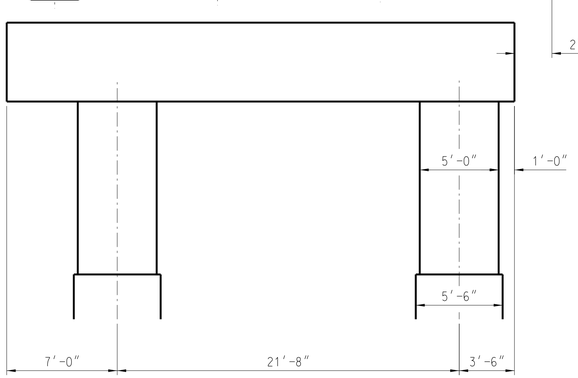

STAGE 2

Build Staged Section of New Westbound Bridge,
then shift Westbound traffic to new Staged Section.

Shift Eastbound Traffic to Existing Westbound Bridge,
then Remove Eastbound Bridge.

Notes:

(1) The controlling case for the existing westbound bridge cut location is shown in the staging plans. The haunched girders in continuous span 5 and the reinforced concrete T-beams in spans 9-18 were also evaluated and overhangs from the beam/girder centerline are less than 2'-10".

In addition, the existing substructure was evaluated to ensure retained beam seats are not cut and that the overhang from the retained pile centerline is less than 1'-6".

(2) During construction, we will adjust the paved shoulder areas to increase the area available when feasible. We will always maintain at least a 2'/2' minimum paved shoulder split in accordance with the Work Zone Traffic Control Standards.

SOUTH CAROLINA
RUMMEL KLEPPER & KAHL LLP
No. 334
CERTIFICATE OF AUTHORIZATION

REV.			
REV.			
REV.			
REVIEWED			
QUAN.			
DR.			
DES.			
	BY	CHK.	DATE

CROWDER 1947 2022 75 YEARS

RK&K

SOUTH CAROLINA
DEPARTMENT OF TRANSPORTATION

ATC 11 BRIDGE STAGING
(SHEET 1 of 3)

COUNTY	ROUTE
KERSHAW	I-20

1/19/2023 1:43:36 PM

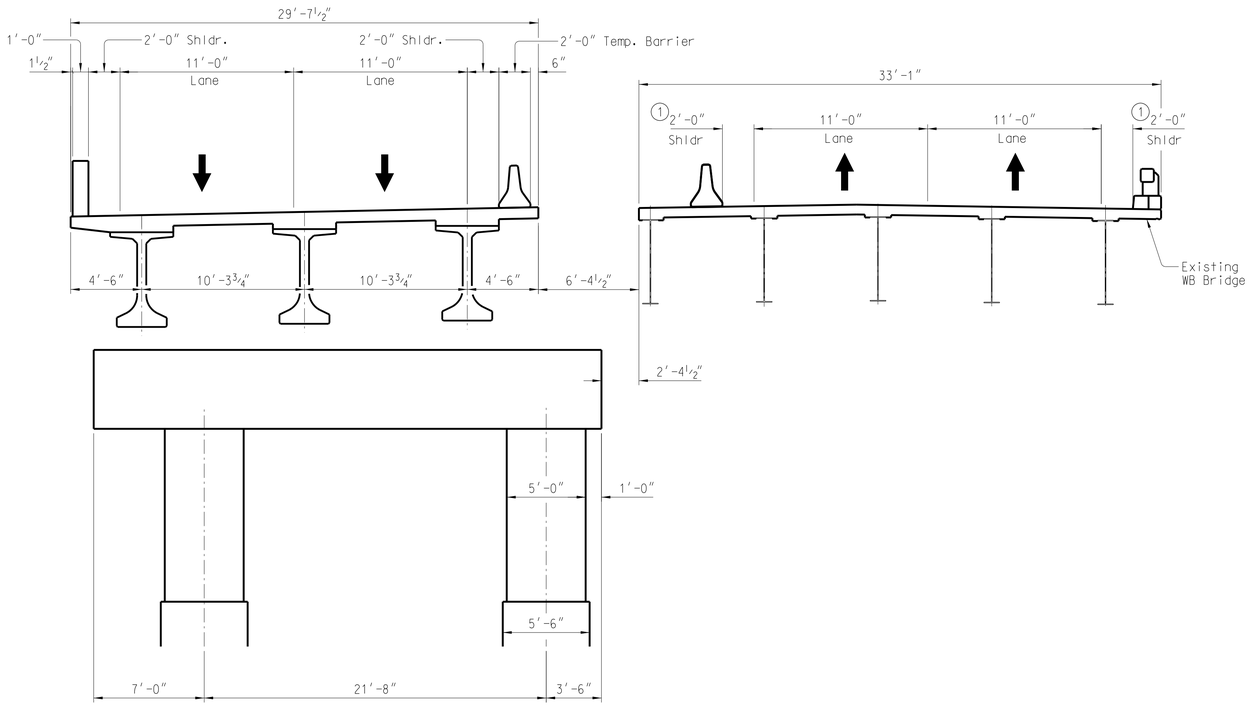

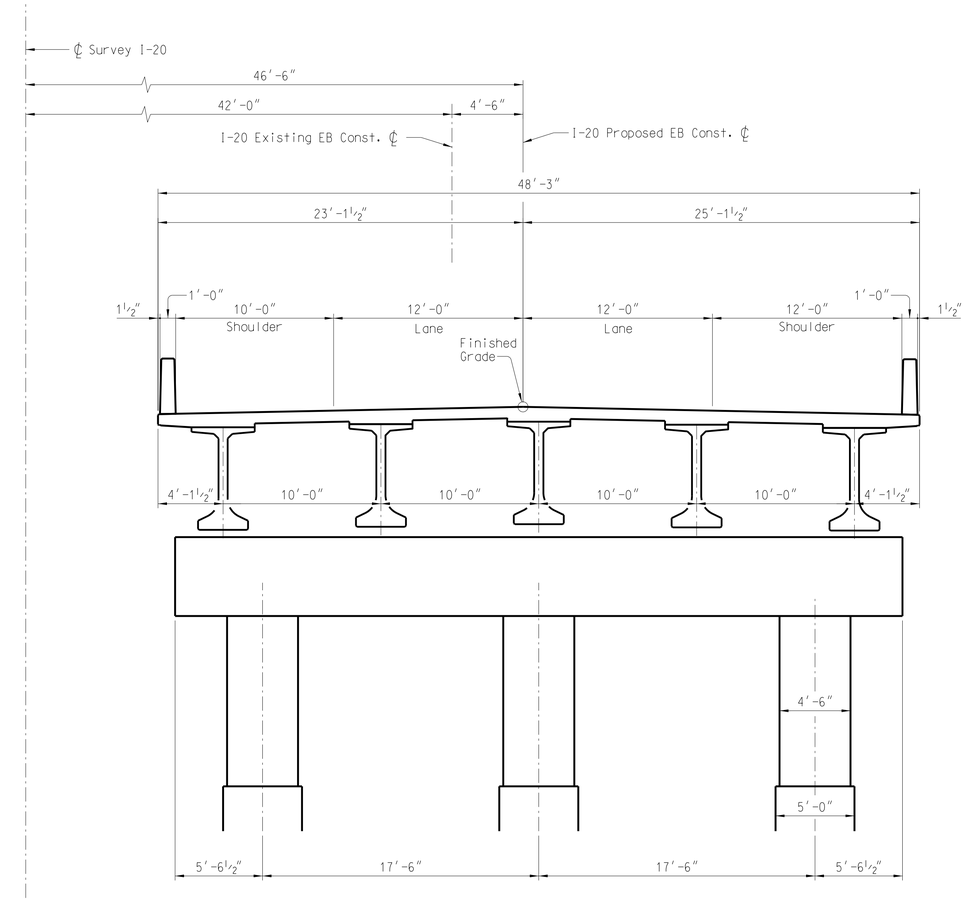

STAGE 3

Construct New Eastbound Bridge

1 During construction, we will adjust the paved shoulder areas to increase the area available when feasible. We will always maintain at least a 2'/2' minimum paved shoulder split in accordance with the Work Zone Traffic Control Standards.

REV.			
REV.			
REV.			
REVIEWED			
QUAN.			
DR.			
DES.			
	BY	CHK.	DATE

STATE OF SOUTH CAROLINA
RUMMEL, KLEPPER & KAHL LLP
No. 334
CERTIFICATE OF AUTHORIZATION

CROWDER 75 YEARS 1947 2022

RK&K

SOUTH CAROLINA
DEPARTMENT OF TRANSPORTATION

ATC 11 BRIDGE STAGING
(SHEET 2 of 3)

COUNTY	ROUTE
KERSHAW	I-20

1/19/2023 1:39:24 PM

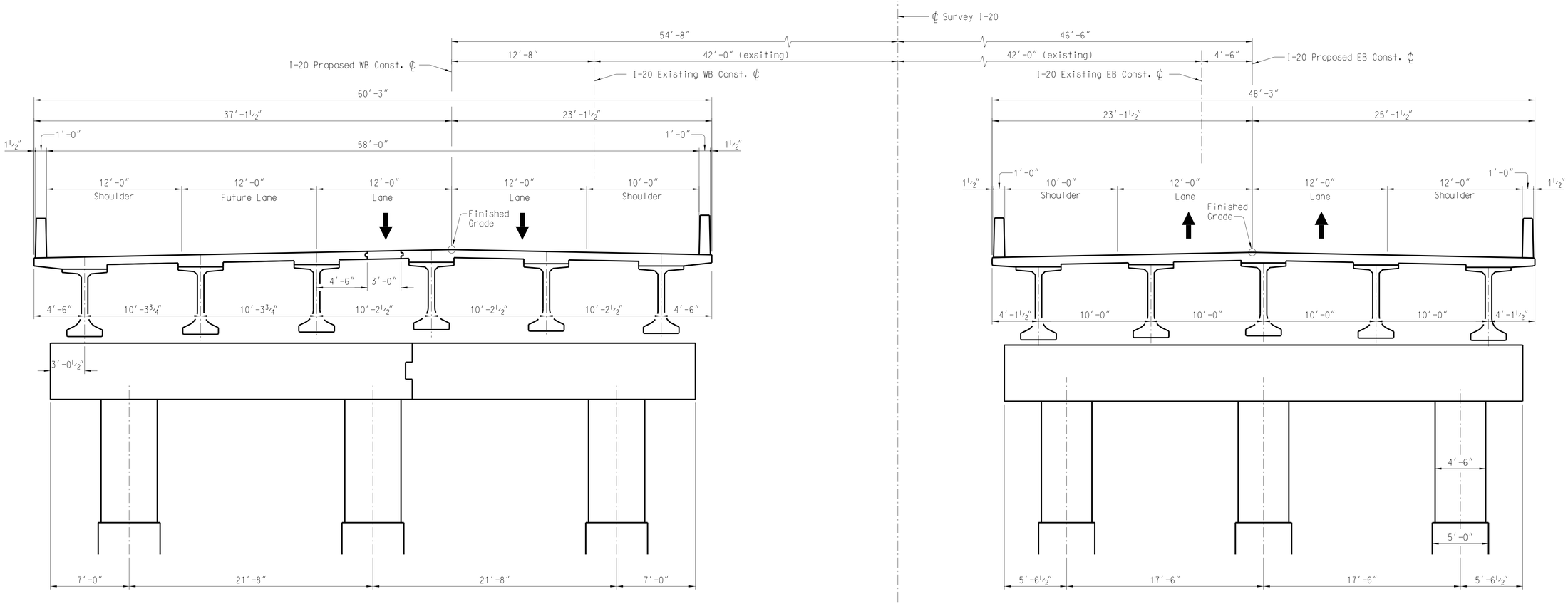

STAGE 4

Shift Eastbound Traffic to the New Eastbound Bridge

Remove Remaining Portion of Existing Westbound Bridge
Construct Rest of New Westbound Bridge
Shift Traffic to Final Configuration

SOUTH CAROLINA
RUMMEL, KLEPPER & KAHL LLP
No. 334
CERTIFICATE OF AUTHORIZATION

REV.			
REV.			
REV.			
REVIEWED			
QUAN.			
DR.			
DES.			
	BY	CHK.	DATE

RK&K

SOUTH CAROLINA
DEPARTMENT OF TRANSPORTATION

ATC 11 BRIDGE STAGING
(SHEET 3 of 3)

COUNTY	ROUTE
KERSHAW	I-20

1/19/2023 10:44:40 AM

Schedule

Activity ID	Activity Name	Original Duration	Start	Finish	Total Float
2023-03-28 SCDOT I-20 EB & WB over Wateree River and S		960	03-Apr-23	11-Jan-27	254
General Milestones		1380	03-Apr-23	11-Jan-27	354
A1000	Notice to Proceed	0	03-Apr-23		1734
A1020	Permitting & ROW Aquisition Complete	0		15-Dec-23	367
A1010	Design Complete (RFC)	0		28-Dec-23	354
A1030	Substantial Completion	0		12-Dec-26	354
A1040	Punchlist Activities	30	13-Dec-26	11-Jan-27	354
A1050	Final Completion	0		11-Jan-27	354
Preconstruction		186	03-Apr-23	28-Dec-23	242
Design		270	03-Apr-23	28-Dec-23	354
Preliminary Submittal Packages		90	03-Apr-23	01-Jul-23	354
A1060	Preliminary Road Submittal Packages	30	03-Apr-23	02-May-23	365
A1070	Preliminary Bridge Submittal Packages	90	03-Apr-23	01-Jul-23	354
Right of Way Submittal Packages		30	03-May-23	01-Jun-23	365
A1080	Right of Way Submittal Packages	30	03-May-23	01-Jun-23	365
Final Submittal Packages		150	03-May-23	29-Sep-23	354
A1090	Final Road Submittal Packages	90	03-May-23	31-Jul-23	414
A1100	Final Bridge Submittal Packages	90	02-Jul-23	29-Sep-23	354
Construction Submittal Packages		150	01-Aug-23	28-Dec-23	354
A1110	RFC Road Submittal Packages	90	01-Aug-23	29-Oct-23	414
A1120	RFC Bridge Submittal Packages	90	30-Sep-23	28-Dec-23	354
Right of Way		135	01-Jun-23	15-Dec-23	250
Right of Way Aquisition		180	02-Jun-23	28-Nov-23	384
A1130	ROW Aquisition	180	02-Jun-23	28-Nov-23	384
USACE		135	01-Jun-23	15-Dec-23	250
A1270	Jurisdictional Determination Letter Submittal (under 3 acres wetland ir	30	01-Jun-23	17-Jul-23	250
A1280	USACE Review and Approval	105	17-Jul-23	15-Dec-23	250
Construction		1080	29-Dec-23	12-Dec-26	354
Structures		990	29-Dec-23	13-Sep-26	354
A1210	West Bound Construction - Phase 1	150	29-Dec-23	26-May-24	354
A1250	East Bound Construction - Single Phase	360	25-Aug-24	19-Aug-25	354
A1220	West Bound Construction - Phase 2	210	16-Feb-26	13-Sep-26	354
Roadway		930	27-May-24	12-Dec-26	354
A1230	West Bound Construction - Phase 1	90	27-May-24	24-Aug-24	354
A1260	East Bound Construction - Single Phase	180	20-Aug-25	15-Feb-26	354
A1240	West East Bound Construction - Phase 2	90	14-Sep-26	12-Dec-26	354

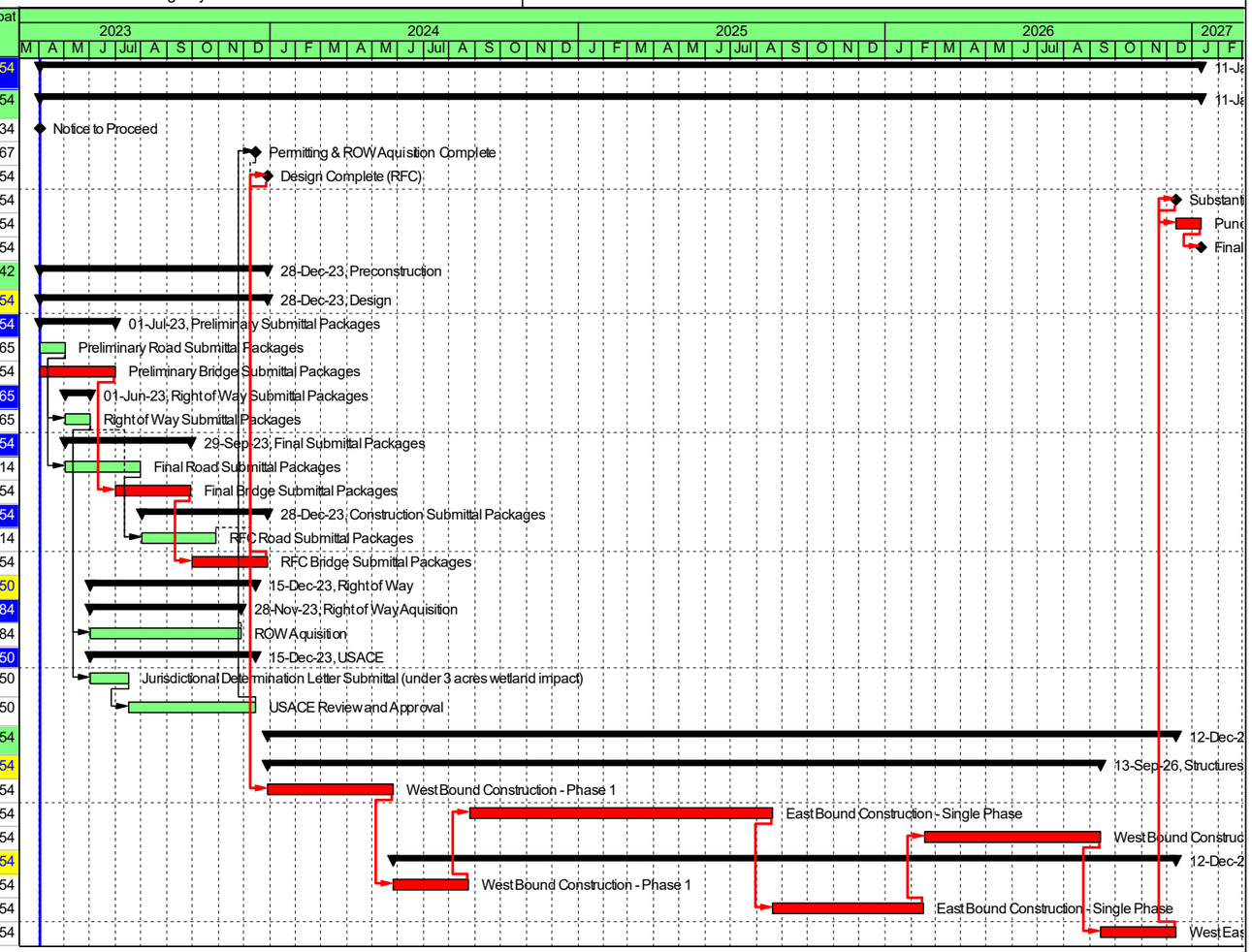

Actual Work | Critical Remaining Work | Summary
Remaining Work | Milestone

TASK filter: All Activities

© Oracle Corporation

Traffic

Safety

Analysis

I-20 over Wateree River Bridge Replacement

Safety Analysis for Alternative Technical Concept (ATC 11)

The analysis presented in this document covers evaluation and comparison of safety performance of the original SCDOT proposed conceptual design and the ATC 11 design option under consideration for the Wateree River bridge replacement along I-20. The evaluation was performed using *Interactive Highway Safety Design Model* (IHSDM) software package which is based on *Highway Safety Manual's* (HSM) predictive methodology.

ANALYSIS SOFTWARE USED:

- IHSDM 2021 Release, V17.0.0. IHSDM is a suite of software analysis tools to evaluate the safety and operational impacts of geometric design decisions on roadways.

DATA COLLECTION:

- Design volumes for Opening Year (2025) and Design Year (2045) along with design plans and corresponding roadway geometry data were provided by the project's design team.

Figure 1: Project Location

ANALYSIS METHODOLOGY:

- Safety analysis was conducted utilizing the HSM crash prediction module within the IHSDM software for the Opening and Design Years.
- Proposed roadway alignment along with geometry and design features (such as shoulders, medians, and barriers) were coded into the IHSDM analysis software for the two design options below.
- The design speed for both the options is 75 mph.
- The projected Average Daily Traffic (ADT) volumes are 42,800 and 57,600 in 2025 and 2045, respectively.
- Individual crash prediction evaluations were performed for each option and analysis results were summarized and sorted by crash severity.

DESCRIPTION OF DESIGN OPTIONS:

- ATC 11 replaces the existing dual structures over the Wateree River with new dual structures. The westbound structure will be replaced on new alignment. The eastbound structure will be replaced on alignment matching the SCDOT conceptual plans. A temporary median bridge over Lugoff Farm Pond will be used to facilitate construction staging. The existing 60' depressed median will be transitioned to 73' depressed with cable barrier on both the eastbound and westbound approaches to the new structures. The proposed I-20 EB structure will provide two – 12' travel lanes with a 10' inside shoulder and 12' outside shoulder. The proposed I-20 WB structure will provide two – 12' travel lanes with a 10' inside shoulder and a 24' outside shoulder (the 24' shoulder provides 12' for a future third travel lane and a 12' outside shoulder). To transition the proposed westbound centerline the western approach utilizes 7,800' radius curves with tangent separation and 16,100' reverse radius curves on the eastern approach. The existing centerline for the eastbound lanes will be maintained in this option.
- The dual bridge replacement option provided by SCDOT will replace the existing bridges over Wateree River on relocated alignments. The existing 60' depressed median will be transitioned to a 69' depressed median with cable guardrail on both the eastbound and westbound approaches. This option will provide two – 12' lanes in both directions of travel with 10' inside shoulders and 12' outside shoulders. To transition the proposed eastbound and westbound centerlines the western approaches utilize 20,000' reverse radius curves on both the eastbound and westbound lanes. To transition the proposed eastbound and westbound centerlines the eastern approaches utilize 16,100' reverse radius curves on both the eastbound and westbound lanes.

ANALYSIS RESULTS:

A summary of predictive crash analysis results from IHSDM for ATC 11 and SCDOT's option are presented in the **Table 1**. Travel crash rates (crashes per million vehicle miles traveled) was the selected Measure of Effectiveness (MOE) to compare the alternatives. Based on the data provided in Table 1, Travel Crash Rates for ATC 11 are equal or better than those for the SCDOT proposed conceptual design, indicative of comparable crash performance between the two designs.

Table 1: IHSDM Analysis Summary Results

Option	2025-2045 Predicted Crashes - Option 3								
	Fatal (K) Crashes	Incapacitating Injury (A) Crashes	Non-Incapacitating Injury (B) Crashes	Possible Injury (C) Crashes	No Injury (O) Crashes	Total Crashes	Segment Length (mi)	Travel Crash Rate (crashes/million veh-mi)	FI Travel Crash Rate (crashes/million veh-mi)
ATC 11	1.4	3.5	14.4	17.8	100.3	137.4	0.65	0.5	0.1
SCDOT	1.4	3.5	14.4	17.9	101.2	138.4	0.78	0.5	0.1
Delta	**0.0**	**0.0**	**0.0**	**0.1**	**0.9**	**1.0**	**0.13**	**0.0**	**0.0**

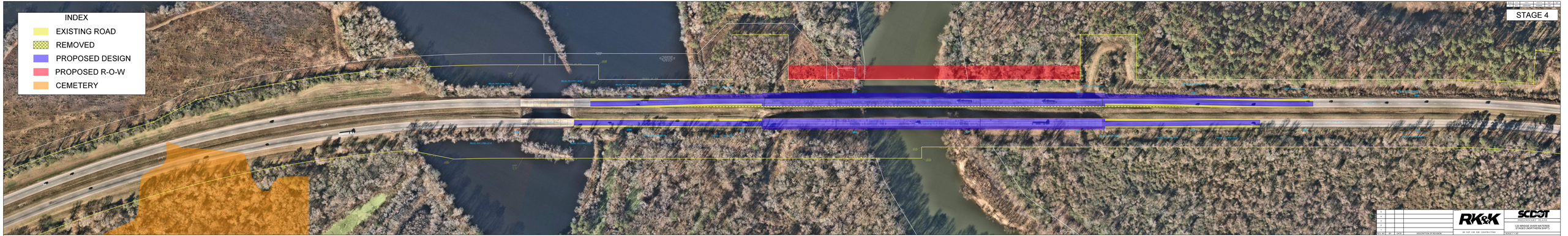

NO.	DATE	BY	DESCRIPTION OF REVISION
4			
3			
2			
1			
0			AS SUBT. CNS. FOR CONSTRUCTION

RK&K

SCDOT

PRELIMINARY - PLANS

I-20 BRIDGE OVER WACCAMAW
STAGED (NORTHERN SHIFT)

SCALE: 1" = 50'

Interactive Highway Safety Design Model

Crash Prediction Evaluation Report

December 1, 2022

Disclaimer

The Interactive Highway Design Model (IHSDM) software is disseminated under the sponsorship of the Department of Transportation in the interest of information exchange. The United States Government assumes no liability for its content or use thereof. This document does not constitute a standard, specification, or regulation.

The United States Government does not endorse products or manufacturers. Trade and manufacturers' names may appear in this software and documentation only because they are considered essential to the objective of the software.

Limited Warranty and Limitations of Remedies

This software product is provided "as-is," without warranty of any kind-either expressed or implied (but not limited to the implied warranties of merchantability and fitness for a particular purpose). The FHWA do not warrant that the functions contained in the software will meet the end-user's requirements or that the operation of the software will be uninterrupted and error-free.

Under no circumstances will the FHWA be liable to the end-user for any damages or claimed lost profits, lost savings, or other incidental or consequential damages rising out of the use or inability to use the software (even if these organizations have been advised of the possibility of such damages), or for any claim by any other party.

Notice

The use of the IHSDM software is being done strictly on a voluntary basis. In exchange for provision of IHSDM, the user agrees that the Federal Highway Administration (FHWA), U.S. Department of Transportation and any other agency of the Federal Government shall not be responsible for any errors, damage or other liability that may result from any and all use of the software, including installation and testing of the software. The user further agrees to hold the FHWA and the Federal Government harmless from any resulting liability. The user agrees that this hold harmless provision shall flow to any person to whom or any entity to which the user provides the IHSDM software. It is the user's full responsibility to inform any person to whom or any entity to which it provides the IHSDM software of this hold harmless provision.

Table of Contents

Report Overview **1**
Disclaimer Regarding Crash Prediction Method 2
Section Types **3**
Section 1 Evaluation 3

List of Tables

Table Evaluation Freeway - Homogeneous Segments (Section 1) 5
Table Predicted Freeway Crash Rates and Frequencies Summary (Section 1) 6
Table Predicted Crash Frequencies and Rates by Freeway Segment/Intersection (Section 1) 7
Table Predicted Crash Frequencies and Rates by Horizontal Design Element (Section 1) 7
Table Predicted Crash Frequencies by Year (Section 1) 8
Table Predicted Crash Severity by Freeway Segment (Section 1) 9
Table Predicted Freeway Crash Type Distribution (Section 1) 10

List of Figures

Figure Crash Prediction Summary (Section 1) 4

Report Overview

Report Generated: Dec 1, 2022 12:20 PM
Report Template: System: Single Page, 508 Compliant [System] (mlcpm5, Dec 5, 2019 1:16 PM)

Evaluation Date: Thu Dec 01 12:18:17 EST 2022
IHSDM Version: v17.0.0 (Sep 22, 2021)
Crash Prediction Module: v12.0.0 (Sep 22, 2021)

User Name: Renato Alva Coletti
Organization Name: RK&K
Phone: 4074019535
E-Mail: rcoletti@rkk.com

Project Title: Bridge over Wateree DB_Option 4
Project Comment: Option 4
Project Unit System: U.S. Customary

Highway Title: Alignment I20_EB_CONST
Highway Comment: Imported from I-20_Option4.xml
Highway Version: 1

Evaluation Title: Option 4_2045
Evaluation Comment: Created Thu Dec 01 12:17:51 EST 2022

Minimum Location: 1789+27.470
Maximum Location: 1830+54.253

Policy for Superelevation: AASHTO 2011 U.S. Customary
Calibration: HSM Configuration
Crash Distribution: HSM Configuration
Model/CMF: HSM Configuration

First Year of Analysis: 2025
Last Year of Analysis: 2045
Empirical-Bayes Analysis: None
First Year of Observed Crashes:
Last Year of Observed Crashes:

Disclaimer Regarding Crash Prediction Method

IMPORTANT NOTICE ABOUT COMPARING RESULTS FROM HIGHWAY SAFETY MANUAL FIRST EDITION (2010) MODELS TO RESULTS FROM NEW MODELS DEVELOPED UNDER NCHRP PROJECTS 17-70, 17-58, AND 17-68

Since the publication of the Highway Safety Manual - First Edition (HSM-1), in 2010 by the American Association of State Highway and Transportation Officials (AASHTO), multiple research efforts have been undertaken through the National Cooperative Highway Research Program (NCHRP) to develop safety performance models for road segment and intersection facility types that were not initially reflected in the HSM-1, in order to expand the breadth and depth of the HSM in the future.

The IHSDM Crash Prediction Module (CPM) is intended as a faithful implementation of HSM Part C predictive methods. As NCHRP projects to develop new predictive methods for the HSM are completed, FHWA works to incorporate the new methods into IHSDM, sometimes in advance of publication in the HSM. The following new crash predictive methods have been accepted by NCHRP project panels and incorporated into IHSDM, while pending AASHTO's approval for incorporation into a future edition of the HSM:

- Roundabouts: completed in 2018 under NCHRP Project 17-70, the new methods will provide improved outcomes for the safety analysis of roundabouts.
- 6+ lane and one-way urban/suburban arterials (including models for segments and intersections): completed under NCHRP Project 17-58.
- Intersection crash prediction methods for some intersection configurations and traffic control types not currently addressed in the HSM (e.g., all-way stop; rural 3-leg signalized; 3-leg stop-controlled where the major leg turns; urban 5-leg signalized; urban high-speed intersections): completed in 2021 under NCHRP Project 17-68.

However, in the absence of local calibration factors (see HSM-1 Part C, Appendix A for guidance on calibration of the predictive models), it is neither appropriate nor advisable to directly compare the results from new models (from NCHRP Projects 17-58, 17-68, and 17-70) to results from HSM-1 models, as the models were not calibrated to the same base state data sets, and consequently can produce unexpected results. If local calibration factors are available and applied to both new models and HSM-1 models, then it may be appropriate to directly compare the results.*[Note: Work being performed under NCHRP Project 17-72 (Update of Crash Modification Factors for the Highway Safety Manual) is expected to re-calibrate many of the old (HSM-1) and new (e.g., NCHRP 17-70) models to data from a single (or small number of) states, that would allow results from all models to be directly compared.]*

The models produced for NCHRP Project 17-70 have independent value in terms of informing the design of a roundabout and assessing the effects of different design characteristics on the expected safety performance of a roundabout.

The HSM-1 interim method previously included in IHSDM for evaluating roundabouts on urban/suburban arterials (i.e., evaluating an existing intersection and then applying a Crash Modification Factor for replacing the existing intersection with a roundabout) has been deactivated in IHSDM, to minimize any confusion with the new roundabout methodology.

Section Types

Section 1 Evaluation

Section: Section 1
Evaluation Start Location: 1789+27.470
Evaluation End Location: 1830+54.253
Functional Class: Freeway
Type of Alignment: Divided, Multilane
Model Category: Freeway Segment
Calibration Factor: FI_MV=1.0; FI_SV=1.0; PDO_MV=1.0; PDO_SV=1.0;

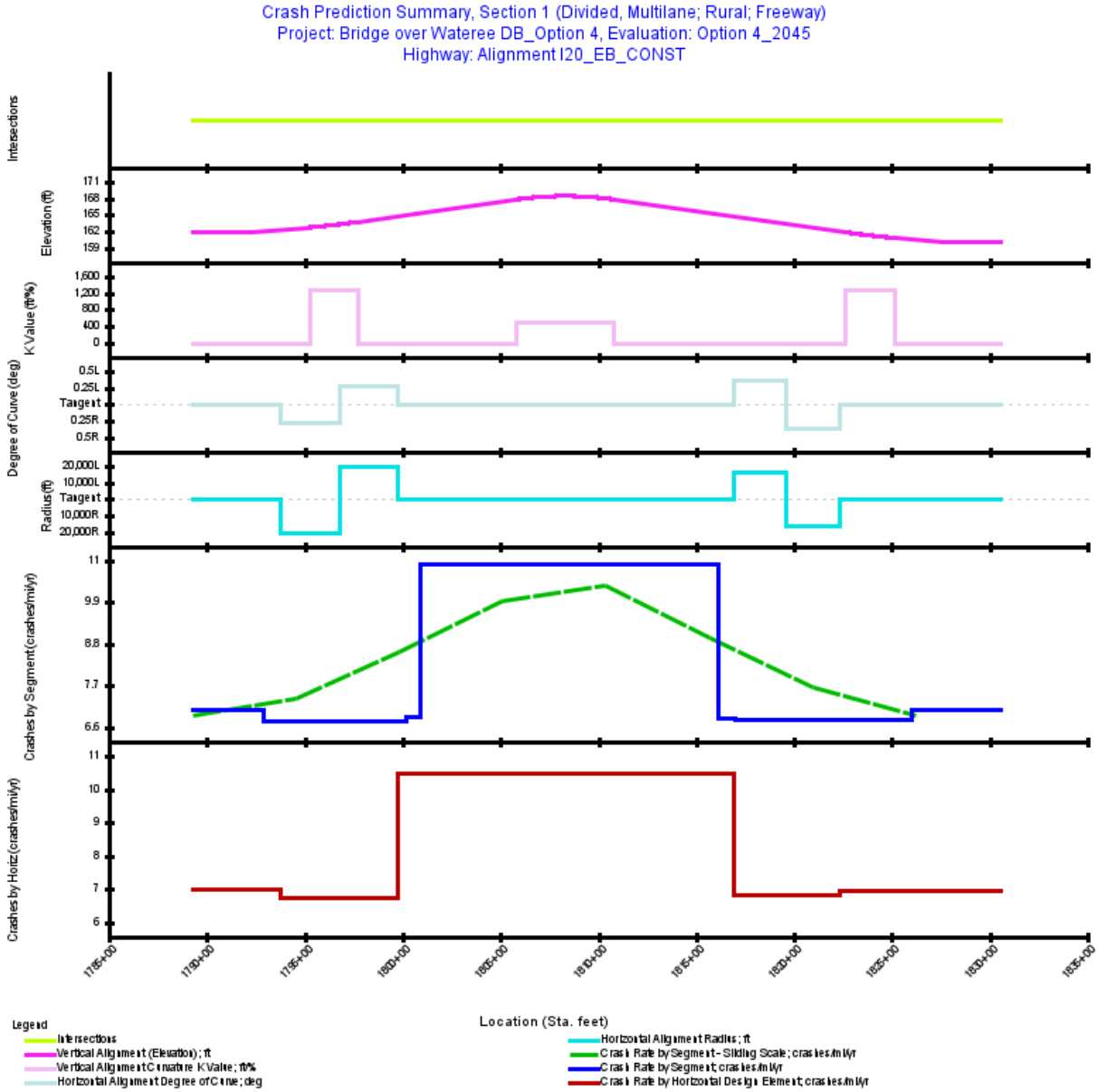

Figure 1. Crash Prediction Summary (Section 1)

Table 1. Evaluation Freeway - Homogeneous Segments (Section 1)

Seg. No.	Type	Area Type	Start Location (Sta. ft)	End Location (Sta. ft)	Length (ft)	Length (mi)	AADT	Median Width (ft)	Type	Effective Median Width (ft)
1	Four-lane Freeway	Rural	1789+27.470	1792+90.470	363.00	0.0688	2025: 42,800; 2026: 43,540; 2027: 44,280; 2028: 45,020; 2029: 45,760; 2030: 46,500; 2031: 47,240; 2032: 47,980; 2033: 48,720; 2034: 49,460; 2035: 50,200; 2036: 50,940; 2037: 51,680; 2038: 52,420; 2039: 53,160; 2040: 53,900; 2041: 54,640; 2042: 55,380; 2043: 56,120; 2044: 56,860; 2045: 57,600	42.50	Non-Traversable Median	62.50
2	Four-lane Freeway	Rural	1792+90.470	1800+15.470	725.00	0.1373	2025: 42,800; 2026: 43,540; 2027: 44,280; 2028: 45,020; 2029: 45,760; 2030: 46,500; 2031: 47,240; 2032: 47,980; 2033: 48,720; 2034: 49,460; 2035: 50,200; 2036: 50,940; 2037: 51,680; 2038: 52,420; 2039: 53,160; 2040: 53,900; 2041: 54,640; 2042: 55,380; 2043: 56,120; 2044: 56,860; 2045: 57,600	50.00	Non-Traversable Median	70.00
3	Four-lane Freeway	Rural	1800+15.470	1800+88.000	72.53	0.0137	2025: 42,800; 2026: 43,540; 2027: 44,280; 2028: 45,020; 2029: 45,760; 2030: 46,500; 2031: 47,240; 2032: 47,980; 2033: 48,720; 2034: 49,460; 2035: 50,200; 2036: 50,940; 2037: 51,680; 2038: 52,420; 2039: 53,160; 2040: 53,900; 2041: 54,640; 2042: 55,380; 2043: 56,120; 2044: 56,860; 2045: 57,600	55.50	Non-Traversable Median	75.50
4	Four-lane Freeway	Rural	1800+88.000	1816+12.000	1,524.00	0.2886	2025: 42,800; 2026: 43,540; 2027: 44,280; 2028: 45,020; 2029: 45,760; 2030: 46,500; 2031: 47,240; 2032: 47,980; 2033: 48,720; 2034: 49,460; 2035: 50,200; 2036: 50,940; 2037: 51,680; 2038: 52,420; 2039: 53,160; 2040: 53,900; 2041: 54,640; 2042: 55,380; 2043: 56,120; 2044: 56,860; 2045: 57,600	56.00	Non-Traversable Median	76.00
5	Four-lane Freeway	Rural	1816+12.000	1817+02.470	90.47	0.0171	2025: 42,800; 2026: 43,540; 2027: 44,280; 2028: 45,020; 2029: 45,760; 2030: 46,500; 2031: 47,240; 2032: 47,980; 2033: 48,720; 2034: 49,460; 2035: 50,200; 2036: 50,940; 2037: 51,680; 2038: 52,420; 2039: 53,160; 2040: 53,900; 2041: 54,640; 2042: 55,380; 2043: 56,120; 2044: 56,860; 2045: 57,600	55.50	Non-Traversable Median	75.50
6	Four-lane Freeway	Rural	1817+02.470	1826+04.470	902.00	0.1708	2025: 42,800; 2026: 43,540; 2027: 44,280; 2028: 45,020; 2029: 45,760; 2030: 46,500; 2031: 47,240; 2032: 47,980; 2033: 48,720; 2034: 49,460; 2035: 50,200; 2036: 50,940; 2037: 51,680; 2038: 52,420; 2039: 53,160; 2040: 53,900; 2041: 54,640; 2042: 55,380; 2043: 56,120; 2044: 56,860; 2045: 57,600	49.99	Non-Traversable Median	69.99
7	Four-lane Freeway	Rural	1826+04.470	1830+54.253	449.78	0.0852	2025: 42,800; 2026: 43,540; 2027: 44,280; 2028: 45,020; 2029: 45,760; 2030: 46,500; 2031: 47,240; 2032: 47,980; 2033: 48,720; 2034: 49,460; 2035: 50,200; 2036: 50,940; 2037: 51,680; 2038: 52,420; 2039: 53,160; 2040: 53,900; 2041: 54,640; 2042: 55,380; 2043: 56,120; 2044: 56,860; 2045: 57,600	42.49	Non-Traversable Median	62.49

Table 2. Predicted Freeway Crash Rates and Frequencies Summary (Section 1)

First Year of Analysis	**2025**
Last Year of Analysis	**2045**
Effective Length (mi)	**0.7816**
Average Future Road AADT (vpd)	**50,200**
Predicted Crashes	
Total Crashes	**137.39**
Fatal and Injury Crashes	**37.07**
Property-Damage-Only Crashes	**100.32**
Percent of Total Predicted Crashes	
Percent Fatal and Injury Crashes (%)	**27**
Percent Property-Damage-Only Crashes (%)	**73**
Predicted Crash Rate	
Crash Rate (crashes/mi/yr)	**8.3707**
FI Crash Rate (crashes/mi/yr)	**2.2587**
PDO Crash Rate (crashes/mi/yr)	**6.1120**
Predicted Travel Crash Rate	
Total Travel (million veh-mi)	**300.74**
Travel Crash Rate (crashes/million veh-mi)	**0.46**
Travel FI Crash Rate (crashes/million veh-mi)	**0.12**
Travel PDO Crash Rate (crashes/million veh-mi)	**0.33**

Note: *Effective Length* is the *segment length* minus the length of the *speed change lanes* if present.

Note: *Total Travel and Crash Rates/Million Vehicle Miles* for *Speed Change Lanes* reflect AADTs that are **half of the Freeway Segment AADTs** based on the assumption of 50/50 directional distribution.

Table 3. Predicted Crash Frequencies and Rates by Freeway Segment/Intersection (Section 1)

Segment Number/Intersection Name/Cross Road	Start Location (Sta. ft)	End Location (Sta. ft)	Effective Length (mi)	Total Predicted Crashes for Evaluation Period	Predicted Total Crash Frequency (crashes/yr)	Predicted FI Crash Frequency (crashes/yr)	Predicted PDO Crash Frequency (crashes/yr)	Predicted Crash Rate (crashes/mi/yr)	Predicted Travel Crash Rate (crashes/million veh-mi)
1	1789+27.470	1792+90.470	0.0688	10.216	0.4865	0.1359	0.3505	7.0757	0.39
2	1792+90.470	1800+15.470	0.1373	19.466	0.9270	0.2940	0.6329	6.7508	0.37
3	1800+15.470	1800+88.000	0.0137	1.982	0.0944	0.0269	0.0674	6.8705	0.38
4	1800+88.000	1816+12.000	0.2886	66.131	3.1491	0.7481	2.4010	10.9103	0.59
5	1816+12.000	1817+02.470	0.0171	2.464	0.1173	0.0340	0.0833	6.8466	0.37
6	1817+02.470	1826+04.470	0.1708	24.474	1.1654	0.3579	0.8075	6.8221	0.37
7	1826+04.470	1830+54.253	0.0852	12.658	0.6028	0.1684	0.4343	7.0759	0.39
Total			0.7816	137.391	6.5424	1.7654	4.7771	8.3707	0.46

Note: *Effective Length* is the *segment length* minus the length of the *speed change lanes* if present. This may create Freeway segments with zero effective length and zero crashes.

Table 4. Predicted Crash Frequencies and Rates by Horizontal Design Element (Section 1)

Title	Start Location (Sta. ft)	End Location (Sta. ft)	Length (mi)	Total Predicted Crashes for Evaluation Period	Predicted Total Crash Frequency (crashes/yr)	Predicted FI Crash Frequency (crashes/yr)	Predicted PDO Crash Frequency (crashes/yr)	Predicted Crash Rate (crashes/mi/yr)	Predicted Travel Crash Rate (crashes/million veh-mi)
Tangent	1789+27.470	1793+77.513	0.0852	12.553	0.5977	0.1712	0.4265	7.0129	0.38
Simple Curve 1	1793+77.513	1796+77.516	0.0568	8.055	0.3836	0.1217	0.2619	6.7508	0.37
Simple Curve 2	1796+77.516	1799+77.519	0.0568	8.055	0.3836	0.1217	0.2619	6.7508	0.37
Tangent	1799+77.519	1816+92.391	0.3248	71.321	3.3963	0.8207	2.5756	10.4569	0.57
Simple Curve 3	1816+92.391	1819+61.560	0.0510	7.304	0.3478	0.1066	0.2412	6.8230	0.37
Simple Curve 4	1819+61.560	1822+30.728	0.0510	7.303	0.3478	0.1068	0.2410	6.8221	0.37
Tangent	1822+30.728	1830+54.253	0.1560	22.799	1.0857	0.3167	0.7689	6.9607	0.38

Table 5. Predicted Crash Frequencies by Year (Section 1)

Year	Total Crashes	FI Crashes	Percent FI (%)	PDO Crashes	Percent PDO (%)
2025	5.42	1.51	27.834	3.91	72.166
2026	5.53	1.53	27.747	3.99	72.253
2027	5.64	1.56	27.662	4.08	72.338
2028	5.75	1.58	27.578	4.16	72.422
2029	5.86	1.61	27.494	4.25	72.506
2030	5.97	1.64	27.412	4.33	72.588
2031	6.08	1.66	27.331	4.42	72.669
2032	6.19	1.69	27.251	4.50	72.749
2033	6.30	1.71	27.172	4.59	72.828
2034	6.42	1.74	27.093	4.68	72.907
2035	6.53	1.76	27.016	4.77	72.984
2036	6.64	1.79	26.940	4.86	73.060
2037	6.76	1.82	26.864	4.94	73.136
2038	6.88	1.84	26.790	5.03	73.210
2039	6.99	1.87	26.716	5.12	73.284
2040	7.11	1.89	26.643	5.22	73.357
2041	7.23	1.92	26.571	5.31	73.429
2042	7.35	1.95	26.499	5.40	73.501
2043	7.47	1.97	26.428	5.49	73.572
2044	7.59	2.00	26.358	5.59	73.641
2045	7.71	2.03	26.289	5.68	73.711
Total	137.39	37.07	26.983	100.32	73.017
Average	6.54	1.76	26.983	4.78	73.017

Note: *Fatal and Injury Crashes* and *Property Damage Only Crashes* do not necessarily sum up to *Total Crashes* because the distribution of these three crashes had been derived independently.

Table 6. Predicted Crash Severity by Freeway Segment (Section 1)

Seg. No.	Fatal (K) Crashes (crashes)	Incapacitating Injury (A) Crashes (crashes)	Non-Incapacitating Injury (B) Crashes (crashes)	Possible Injury (C) Crashes (crashes)	No Injury (O) Crashes (crashes)
1	0.1168	0.2738	1.1455	1.3185	7.3611
2	0.2791	0.6736	2.5690	2.6531	13.2913
3	0.0231	0.0542	0.2269	0.2612	1.4164
4	0.5003	1.2492	5.6344	8.3269	50.4205
5	0.0296	0.0697	0.2882	0.3269	1.7492
6	0.3301	0.7899	3.0957	3.2999	16.9585
7	0.1447	0.3392	1.4194	1.6337	9.1211
Total	1.4238	3.4496	14.3792	17.8201	100.3181

Table 7. Predicted Freeway Crash Type Distribution (Section 1)

Element Type	Crash Type	FI Crashes	Percent FI (%)	PDO Crashes	Percent PDO (%)	Total Crashes	Percent Total (%)
Highway Segment	Collision with Animal	0.22	0.2	4.15	3.0	4.37	3.2
Highway Segment	Collision with Fixed Object	12.34	9.0	39.94	29.1	52.28	38.0
Highway Segment	Collision with Other Object	0.68	0.5	7.99	5.8	8.66	6.3
Highway Segment	Other Single-vehicle Collision	8.01	5.8	10.35	7.5	18.36	13.4
Highway Segment	Collision with Parked Vehicle	0.52	0.4	1.47	1.1	1.99	1.4
Highway Segment	Total Single Vehicle Crashes	21.76	15.8	63.90	46.5	85.66	62.3
Highway Segment	Right-Angle Collision	0.86	0.6	1.09	0.8	1.95	1.4
Highway Segment	Head-on Collision	0.28	0.2	0.15	0.1	0.42	0.3
Highway Segment	Other Multi-vehicle Collision	0.90	0.7	2.84	2.1	3.74	2.7
Highway Segment	Rear-end Collision	9.65	7.0	18.50	13.5	28.15	20.5
Highway Segment	Sideswipe, Same Direction Collision	3.63	2.6	13.84	10.1	17.47	12.7
Highway Segment	Total Multiple Vehicle Crashes	15.31	11.1	36.42	26.5	51.73	37.7
Highway Segment	Total Highway Segment Crashes	37.07	27.0	100.32	73.0	137.39	100.0
	Total Crashes	37.07	27.0	100.32	73.0	137.39	100.0

Note: *Fatal and Injury Crashes* and *Property Damage Only Crashes* do not necessarily sum up to *Total Crashes* because the distribution of these three crashes had been derived independently.

Interactive Highway Safety Design Model

Crash Prediction Evaluation Report

December 1, 2022

Disclaimer

The Interactive Highway Design Model (IHSDM) software is disseminated under the sponsorship of the Department of Transportation in the interest of information exchange. The United States Government assumes no liability for its content or use thereof. This document does not constitute a standard, specification, or regulation.

The United States Government does not endorse products or manufacturers. Trade and manufacturers' names may appear in this software and documentation only because they are considered essential to the objective of the software.

Limited Warranty and Limitations of Remedies

This software product is provided "as-is," without warranty of any kind-either expressed or implied (but not limited to the implied warranties of merchantability and fitness for a particular purpose). The FHWA do not warrant that the functions contained in the software will meet the end-user's requirements or that the operation of the software will be uninterrupted and error-free.

Under no circumstances will the FHWA be liable to the end-user for any damages or claimed lost profits, lost savings, or other incidental or consequential damages rising out of the use or inability to use the software (even if these organizations have been advised of the possibility of such damages), or for any claim by any other party.

Notice

The use of the IHSDM software is being done strictly on a voluntary basis. In exchange for provision of IHSDM, the user agrees that the Federal Highway Administration (FHWA), U.S. Department of Transportation and any other agency of the Federal Government shall not be responsible for any errors, damage or other liability that may result from any and all use of the software, including installation and testing of the software. The user further agrees to hold the FHWA and the Federal Government harmless from any resulting liability. The user agrees that this hold harmless provision shall flow to any person to whom or any entity to which the user provides the IHSDM software. It is the user's full responsibility to inform any person to whom or any entity to which it provides the IHSDM software of this hold harmless provision.

Table of Contents

Report Overview **1**
Disclaimer Regarding Crash Prediction Method 2
Section Types **3**
Section 1 Evaluation 3

List of Tables

Table Evaluation Freeway - Homogeneous Segments (Section 1) 5
Table Predicted Freeway Crash Rates and Frequencies Summary (Section 1) 6
Table Predicted Crash Frequencies and Rates by Freeway Segment/Intersection (Section 1) 7
Table Predicted Crash Frequencies and Rates by Horizontal Design Element (Section 1) 7
Table Predicted Crash Frequencies by Year (Section 1) 8
Table Predicted Crash Severity by Freeway Segment (Section 1) 9
Table Predicted Freeway Crash Type Distribution (Section 1) 9

List of Figures

Figure Crash Prediction Summary (Section 1) 4

Report Overview

Report Generated: Dec 1, 2022 12:23 PM
Report Template: System: Single Page, 508 Compliant [System] (mlcpm5, Dec 5, 2019 1:16 PM)

Evaluation Date: Thu Dec 01 12:19:04 EST 2022
IHSDM Version: v17.0.0 (Sep 22, 2021)
Crash Prediction Module: v12.0.0 (Sep 22, 2021)

User Name: Renato Alva Coletti
Organization Name: RK&K
Phone: 4074019535
E-Mail: rcoletti@rkk.com

Project Title: Bridge over Wateree DB_SCDOT Option
Project Comment: SCDOT Options
Project Unit System: U.S. Customary

Highway Title: Alignment I20_EB/WB_SCDOT
Highway Comment: Imported from I-20_SCDOT.xml
Highway Version: 1

Evaluation Title: SCDOT Option_4
Evaluation Comment: Created Thu Dec 01 12:18:41 EST 2022

Minimum Location: 1789+27.470
Maximum Location: 1830+54.253

Policy for Superelevation: AASHTO 2011 U.S. Customary
Calibration: HSM Configuration
Crash Distribution: HSM Configuration
Model/CMF: HSM Configuration

First Year of Analysis: 2025
Last Year of Analysis: 2045
Empirical-Bayes Analysis: None
First Year of Observed Crashes:
Last Year of Observed Crashes:

Disclaimer Regarding Crash Prediction Method

IMPORTANT NOTICE ABOUT COMPARING RESULTS FROM HIGHWAY SAFETY MANUAL FIRST EDITION (2010) MODELS TO RESULTS FROM NEW MODELS DEVELOPED UNDER NCHRP PROJECTS 17-70, 17-58, AND 17-68

Since the publication of the Highway Safety Manual - First Edition (HSM-1), in 2010 by the American Association of State Highway and Transportation Officials (AASHTO), multiple research efforts have been undertaken through the National Cooperative Highway Research Program (NCHRP) to develop safety performance models for road segment and intersection facility types that were not initially reflected in the HSM-1, in order to expand the breadth and depth of the HSM in the future.

The IHSDM Crash Prediction Module (CPM) is intended as a faithful implementation of HSM Part C predictive methods. As NCHRP projects to develop new predictive methods for the HSM are completed, FHWA works to incorporate the new methods into IHSDM, sometimes in advance of publication in the HSM. The following new crash predictive methods have been accepted by NCHRP project panels and incorporated into IHSDM, while pending AASHTO's approval for incorporation into a future edition of the HSM:

- Roundabouts: completed in 2018 under NCHRP Project 17-70, the new methods will provide improved outcomes for the safety analysis of roundabouts.
- 6+ lane and one-way urban/suburban arterials (including models for segments and intersections): completed under NCHRP Project 17-58.
- Intersection crash prediction methods for some intersection configurations and traffic control types not currently addressed in the HSM (e.g., all-way stop; rural 3-leg signalized; 3-leg stop-controlled where the major leg turns; urban 5-leg signalized; urban high-speed intersections): completed in 2021 under NCHRP Project 17-68.

However, in the absence of local calibration factors (see HSM-1 Part C, Appendix A for guidance on calibration of the predictive models), it is neither appropriate nor advisable to directly compare the results from new models (from NCHRP Projects 17-58, 17-68, and 17-70) to results from HSM-1 models, as the models were not calibrated to the same base state data sets, and consequently can produce unexpected results. If local calibration factors are available and applied to both new models and HSM-1 models, then it may be appropriate to directly compare the results.*[Note: Work being performed under NCHRP Project 17-72 (Update of Crash Modification Factors for the Highway Safety Manual) is expected to re-calibrate many of the old (HSM-1) and new (e.g., NCHRP 17-70) models to data from a single (or small number of) states, that would allow results from all models to be directly compared.]*

The models produced for NCHRP Project 17-70 have independent value in terms of informing the design of a roundabout and assessing the effects of different design characteristics on the expected safety performance of a roundabout.

The HSM-1 interim method previously included in IHSDM for evaluating roundabouts on urban/suburban arterials (i.e., evaluating an existing intersection and then applying a Crash Modification Factor for replacing the existing intersection with a roundabout) has been deactivated in IHSDM, to minimize any confusion with the new roundabout methodology.

Section Types

Section 1 Evaluation

Section: Section 1
Evaluation Start Location: 1789+27.470
Evaluation End Location: 1830+54.253
Functional Class: Freeway
Type of Alignment: Divided, Multilane
Model Category: Freeway Segment
Calibration Factor: FI_MV=1.0; FI_SV=1.0; PDO_MV=1.0; PDO_SV=1.0;

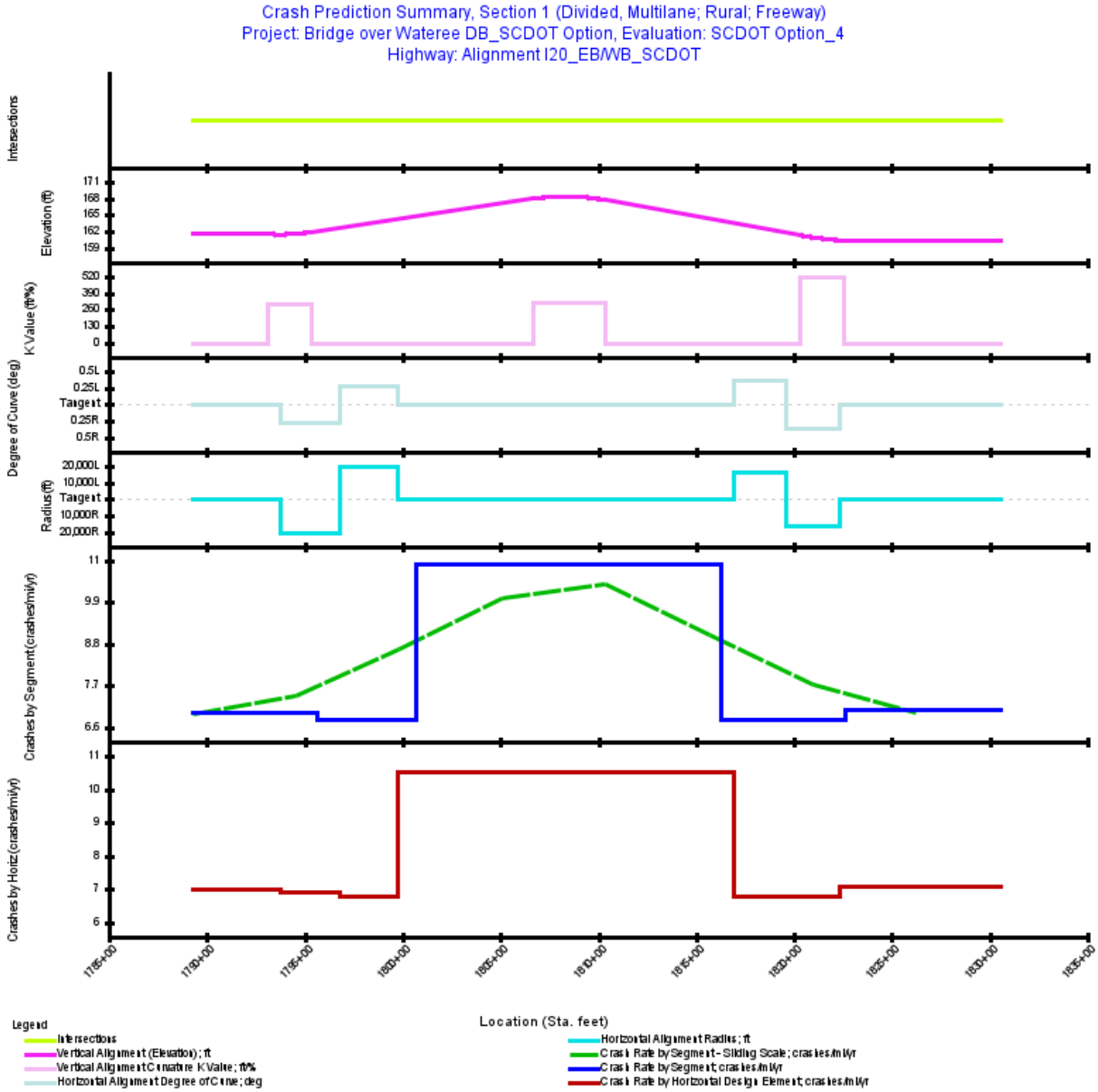

Figure 1. Crash Prediction Summary (Section 1)

Table 1. Evaluation Freeway - Homogeneous Segments (Section 1)

Seg. No.	Type	Area Type	Start Location (Sta. ft)	End Location (Sta. ft)	Length (ft)	Length (mi)	AADT	Median Width (ft)	Type	Effective Median Width (ft)
1	Four-lane Freeway	Rural	1789+27.470	1795+63.470	636.00	0.1205	2025: 42,800; 2026: 43,540; 2027: 44,280; 2028: 45,020; 2029: 45,760; 2030: 46,500; 2031: 47,240; 2032: 47,980; 2033: 48,720; 2034: 49,460; 2035: 50,200; 2036: 50,940; 2037: 51,680; 2038: 52,420; 2039: 53,160; 2040: 53,900; 2041: 54,640; 2042: 55,380; 2043: 56,120; 2044: 56,860; 2045: 57,600	42.50	Non-Traversable Median	62.50
2	Four-lane Freeway	Rural	1795+63.470	1800+72.000	508.53	0.0963	2025: 42,800; 2026: 43,540; 2027: 44,280; 2028: 45,020; 2029: 45,760; 2030: 46,500; 2031: 47,240; 2032: 47,980; 2033: 48,720; 2034: 49,460; 2035: 50,200; 2036: 50,940; 2037: 51,680; 2038: 52,420; 2039: 53,160; 2040: 53,900; 2041: 54,640; 2042: 55,380; 2043: 56,120; 2044: 56,860; 2045: 57,600	47.00	Non-Traversable Median	67.00
3	Four-lane Freeway	Rural	1800+72.000	1816+28.000	1,556.00	0.2947	2025: 42,800; 2026: 43,540; 2027: 44,280; 2028: 45,020; 2029: 45,760; 2030: 46,500; 2031: 47,240; 2032: 47,980; 2033: 48,720; 2034: 49,460; 2035: 50,200; 2036: 50,940; 2037: 51,680; 2038: 52,420; 2039: 53,160; 2040: 53,900; 2041: 54,640; 2042: 55,380; 2043: 56,120; 2044: 56,860; 2045: 57,600	49.00	Non-Traversable Median	69.00
4	Four-lane Freeway	Rural	1816+28.000	1822+62.470	634.47	0.1202	2025: 42,800; 2026: 43,540; 2027: 44,280; 2028: 45,020; 2029: 45,760; 2030: 46,500; 2031: 47,240; 2032: 47,980; 2033: 48,720; 2034: 49,460; 2035: 50,200; 2036: 50,940; 2037: 51,680; 2038: 52,420; 2039: 53,160; 2040: 53,900; 2041: 54,640; 2042: 55,380; 2043: 56,120; 2044: 56,860; 2045: 57,600	47.00	Non-Traversable Median	67.00
5	Four-lane Freeway	Rural	1822+62.470	1830+54.253	791.78	0.1500	2025: 42,800; 2026: 43,540; 2027: 44,280; 2028: 45,020; 2029: 45,760; 2030: 46,500; 2031: 47,240; 2032: 47,980; 2033: 48,720; 2034: 49,460; 2035: 50,200; 2036: 50,940; 2037: 51,680; 2038: 52,420; 2039: 53,160; 2040: 53,900; 2041: 54,640; 2042: 55,380; 2043: 56,120; 2044: 56,860; 2045: 57,600	42.50	Non-Traversable Median	62.50

Table 2. Predicted Freeway Crash Rates and Frequencies Summary (Section 1)

First Year of Analysis	**2025**
Last Year of Analysis	**2045**
Effective Length (mi)	**0.7816**
Average Future Road AADT (vpd)	**50,200**
Predicted Crashes	
Total Crashes	**138.43**
Fatal and Injury Crashes	**37.19**
Property-Damage-Only Crashes	**101.23**
Percent of Total Predicted Crashes	
Percent Fatal and Injury Crashes (%)	**27**
Percent Property-Damage-Only Crashes (%)	**73**
Predicted Crash Rate	
Crash Rate (crashes/mi/yr)	**8.4339**
FI Crash Rate (crashes/mi/yr)	**2.2660**
PDO Crash Rate (crashes/mi/yr)	**6.1678**
Predicted Travel Crash Rate	
Total Travel (million veh-mi)	**300.74**
Travel Crash Rate (crashes/million veh-mi)	**0.46**
Travel FI Crash Rate (crashes/million veh-mi)	**0.12**
Travel PDO Crash Rate (crashes/million veh-mi)	**0.34**

Note: *Effective Length* is the *segment length* minus the length of the *speed change lanes* if present.

Note: *Total Travel and Crash Rates/Million Vehicle Miles* for *Speed Change Lanes* reflect AADTs that are **half of the Freeway Segment AADTs** based on the assumption of 50/50 directional distribution.

Table 3. Predicted Crash Frequencies and Rates by Freeway Segment/Intersection (Section 1)

Segment Number/Intersection Name/Cross Road	Start Location (Sta. ft)	End Location (Sta. ft)	Effective Length (mi)	Total Predicted Crashes for Evaluation Period	Predicted Total Crash Frequency (crashes/yr)	Predicted FI Crash Frequency (crashes/yr)	Predicted PDO Crash Frequency (crashes/yr)	Predicted Crash Rate (crashes/mi/yr)	Predicted Travel Crash Rate (crashes/million veh-mi)
1	1789+27.470	1795+63.470	0.1205	17.712	0.8434	0.2457	0.5977	7.0020	0.38
2	1795+63.470	1800+72.000	0.0963	13.749	0.6547	0.2063	0.4484	6.7980	0.37
3	1800+72.000	1816+28.000	0.2947	67.520	3.2152	0.7638	2.4514	10.9103	0.59
4	1816+28.000	1822+62.470	0.1202	17.164	0.8174	0.2587	0.5586	6.8019	0.37
5	1822+62.470	1830+54.253	0.1500	22.283	1.0611	0.2965	0.7646	7.0758	0.39
Total			0.7816	138.428	6.5918	1.7711	4.8207	8.4339	0.46

Note: *Effective Length* is the *segment length* minus the length of the *speed change lanes* if present. This may create Freeway segments with zero effective length and zero crashes.

Table 4. Predicted Crash Frequencies and Rates by Horizontal Design Element (Section 1)

Title	Start Location (Sta. ft)	End Location (Sta. ft)	Length (mi)	Total Predicted Crashes for Evaluation Period	Predicted Total Crash Frequency (crashes/yr)	Predicted FI Crash Frequency (crashes/yr)	Predicted PDO Crash Frequency (crashes/yr)	Predicted Crash Rate (crashes/mi/yr)	Predicted Travel Crash Rate (crashes/million veh-mi)
Tangent	1789+27.470	1793+77.513	0.0852	12.533	0.5968	0.1739	0.4229	7.0020	0.38
Simple Curve 1	1793+77.513	1796+77.516	0.0568	8.262	0.3934	0.1181	0.2753	6.9245	0.38
Simple Curve 2	1796+77.516	1799+77.519	0.0568	8.111	0.3863	0.1217	0.2645	6.7980	0.37
Tangent	1799+77.519	1816+92.391	0.3248	71.816	3.4198	0.8284	2.5914	10.5295	0.57
Simple Curve 3	1816+92.391	1819+61.560	0.0510	7.282	0.3468	0.1098	0.2370	6.8019	0.37
Simple Curve 4	1819+61.560	1822+30.728	0.0510	7.282	0.3468	0.1098	0.2370	6.8019	0.37
Tangent	1822+30.728	1830+54.253	0.1560	23.141	1.1020	0.3094	0.7925	7.0653	0.39

Table 5. Predicted Crash Frequencies by Year (Section 1)

Year	Total Crashes	FI Crashes	Percent FI (%)	PDO Crashes	Percent PDO (%)
2025	5.46	1.51	27.710	3.95	72.290
2026	5.57	1.54	27.624	4.03	72.376
2027	5.68	1.56	27.540	4.12	72.460
2028	5.79	1.59	27.456	4.20	72.544
2029	5.90	1.61	27.374	4.29	72.626
2030	6.01	1.64	27.293	4.37	72.707
2031	6.12	1.67	27.212	4.46	72.788
2032	6.24	1.69	27.133	4.54	72.867
2033	6.35	1.72	27.055	4.63	72.945
2034	6.46	1.74	26.977	4.72	73.023
2035	6.58	1.77	26.901	4.81	73.099
2036	6.70	1.80	26.825	4.90	73.175
2037	6.81	1.82	26.750	4.99	73.249
2038	6.93	1.85	26.677	5.08	73.323
2039	7.05	1.87	26.604	5.17	73.397
2040	7.16	1.90	26.531	5.26	73.469
2041	7.28	1.93	26.460	5.36	73.540
2042	7.40	1.95	26.389	5.45	73.611
2043	7.52	1.98	26.319	5.54	73.681
2044	7.64	2.01	26.250	5.64	73.750
2045	7.77	2.03	26.181	5.73	73.819
Total	138.43	37.19	26.868	101.23	73.132
Average	6.59	1.77	26.868	4.82	73.132

Note: *Fatal and Injury Crashes* and *Property Damage Only Crashes* do not necessarily sum up to *Total Crashes* because the distribution of these three crashes had been derived independently.

Table 6. Predicted Crash Severity by Freeway Segment (Section 1)

Seg. No.	Fatal (K) Crashes (crashes)	Incapacitating Injury (A) Crashes (crashes)	Non-Incapacitating Injury (B) Crashes (crashes)	Possible Injury (C) Crashes (crashes)	No Injury (O) Crashes (crashes)
1	0.2188	0.5182	2.0987	2.3248	12.5515
2	0.1955	0.4716	1.8016	1.8638	9.4168
3	0.5108	1.2754	5.7527	8.5018	51.4792
4	0.2462	0.5946	2.2624	2.3300	11.7313
5	0.2547	0.5971	2.4987	2.8759	16.0563
Total	1.4261	3.4570	14.4141	17.8962	101.2350

Table 7. Predicted Freeway Crash Type Distribution (Section 1)

Element Type	Crash Type	FI Crashes	Percent FI (%)	PDO Crashes	Percent PDO (%)	Total Crashes	Percent Total (%)
Highway Segment	Collision with Animal	0.22	0.2	4.19	3.0	4.41	3.2
Highway Segment	Collision with Fixed Object	12.34	8.9	40.32	29.1	52.65	38.0
Highway Segment	Collision with Other Object	0.67	0.5	8.06	5.8	8.74	6.3
Highway Segment	Other Single-vehicle Collision	8.01	5.8	10.45	7.5	18.46	13.3
Highway Segment	Collision with Parked Vehicle	0.52	0.4	1.48	1.1	2.01	1.4
Highway Segment	Total Single Vehicle Crashes	21.75	15.7	64.51	46.6	86.27	62.3
Highway Segment	Right-Angle Collision	0.86	0.6	1.10	0.8	1.97	1.4
Highway Segment	Head-on Collision	0.28	0.2	0.15	0.1	0.42	0.3
Highway Segment	Other Multi-vehicle Collision	0.91	0.7	2.86	2.1	3.77	2.7
Highway Segment	Rear-end Collision	9.73	7.0	18.66	13.5	28.38	20.5
Highway Segment	Sideswipe, Same Direction Collision	3.66	2.6	13.96	10.1	17.61	12.7
Highway Segment	Total Multiple Vehicle Crashes	15.44	11.2	36.72	26.5	52.16	37.7
Highway Segment	Total Highway Segment Crashes	37.19	26.9	101.23	73.1	138.43	100.0
	Total Crashes	37.19	26.9	101.23	73.1	138.43	100.0

Note: *Fatal and Injury Crashes* and *Property Damage Only Crashes* do not necessarily sum up to *Total Crashes* because the distribution of these three crashes had been derived independently.

PO Box 30007, Charlotte, North Carolina 28230

704.332.8184 www.crowderusa.com

75 YEARS 1947 2022 CROWDER

100 years RK&K