I2000X
I-20 WB PGL
K = 231
855.00' V.C.
VPI= 119+00.00
Elev.= 213.38
I2000X
I-20 EB PGL
700' V.C.
VPI= 119+67.00
Elev.= 216.39
BSHRG0P
INTERSTATE
20
378
RIVERCHASE WAY
DAVEGA DRIVE
SALUDA RIVER
I20000X
I20CDE1
BSHRG0P
INTERSTATE
20
BUSH RIVER RD

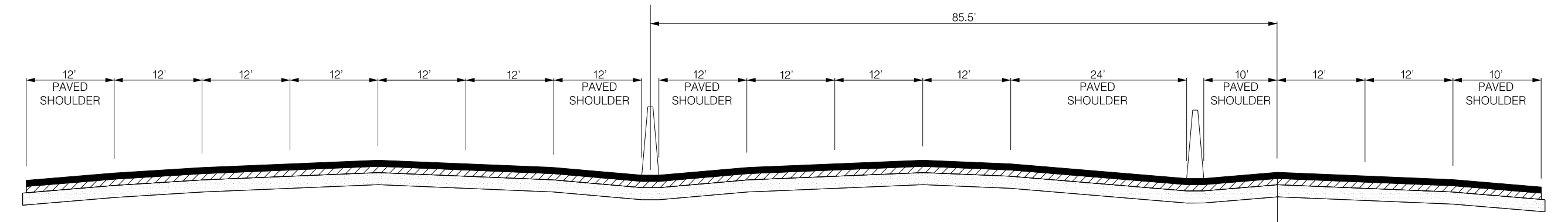
I20000X
℄
85.5'
12' PAVED SHOULDER
12'
12'
12'
12'
12'
12' PAVED SHOULDER
12' PAVED SHOULDER
12'
12'
12'
24' PAVED SHOULDER
10' PAVED SHOULDER
12'
12'
10' PAVED SHOULDER
I-20 EB CD PGL AND CROWN POINT

TYPICAL #1
INTERSTATE 20
STA 110+00.00

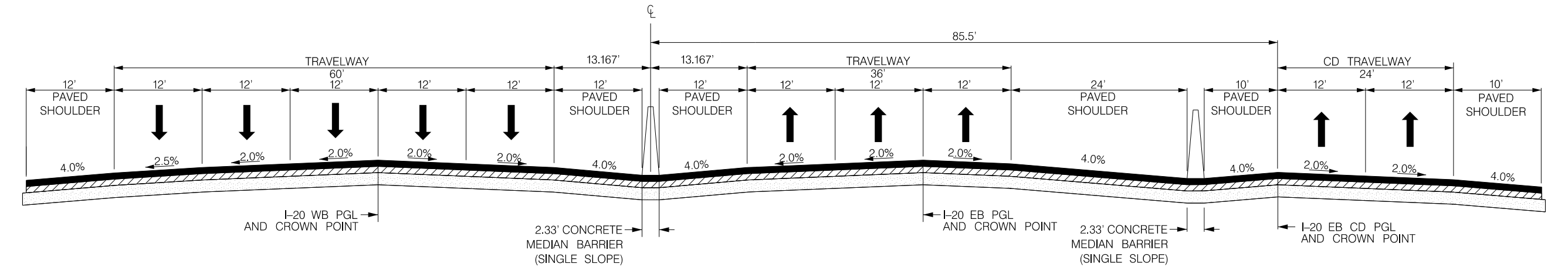
I20000X
℄
85.5'
TRAVELWAY 60'
13.167'
13.167'
TRAVELWAY 36'
CD TRAVELWAY 24'
12' PAVED SHOULDER
12'
12'
12'
12'
12'
12' PAVED SHOULDER
12' PAVED SHOULDER
12'
12'
12'
24' PAVED SHOULDER
10' PAVED SHOULDER
12'
12'
10' PAVED SHOULDER
4.0%
2.5%
2.0%
2.0%
2.0%
2.0%
4.0%
4.0%
2.0%
2.0%
2.0%
4.0%
4.0%
2.0%
2.0%
4.0%
I-20 WB PGL AND CROWN POINT
2.33' CONCRETE MEDIAN BARRIER (SINGLE SLOPE)
I-20 EB PGL AND CROWN POINT
2.33' CONCRETE MEDIAN BARRIER (SINGLE SLOPE)
I-20 EB CD PGL AND CROWN POINT

TYPICAL #2
INTERSTATE 20
STA 122+00.00 TO STA. 123+01.30

TECHNICAL PROVISION ATTACHMENT - TP 200 ROADWAY

CAROLINA
CROSSROADS

N

GRAPHIC SCALE
0 100 200

REFERENCE DATA

Beginning chain I20000X description

Point I20000 N 792,437.0331 E 1,954,910.0074 Sta 10+00.00

Course from I20000 to PC I20000X-1 N 63° 59' 47.47" E Dist 1,267.8000

Curve Data

Curve I20000X-1
P.I. Station 32+50.62 N 793,423.7641 E 1,956,932.7939
Delta = 19° 28' 01.20" (LT)
Degree = 1° 00' 00.00"
Tangent = 982.8229
Length = 1,946.7000
Radius = 5,729.5780
External = 83.6831
Long Chord = 1,937.3500
Mid. Ord. = 82.4785
P.C. Station 22+67.80 N 792,992.8692 E 1,956,049.4647
P.T. Station 42+14.50 N 794,124.4080 E 1,957,622.0247
C.C. N 798,142.4272 E 1,953,537.4702
Back = N 63° 59' 47.47" E
Ahead = N 44° 31' 46.27" E
Chord Bear = N 54° 15' 46.87" E

Course from PT I20000X-1 to PC I20000X-2 N 44° 31' 46.27" E Dist 8,724.2542

Curve Data

Curve I20000X-2
P.I. Station 138+39.18 N 800,985.7400 E 1,964,371.5892
Delta = 26° 31' 42.64" (RT)
Degree = 1° 30' 00.00"
Tangent = 900.4275
Length = 1,768.5675
Radius = 3,819.7187
External = 104.6947
Long Chord = 1,752.8122
Mid. Ord. = 101.9017
P.C. Station 129+38.75 N 800,343.8349 E 1,963,740.1404
P.T. Station 147+07.32 N 801,278.0280 E 1,965,223.2566
C.C. N 797,665.1554 E 1,966,463.1767
Back = N 44° 31' 46.27" E
Ahead = N 71° 03' 28.91" E
Chord Bear = N 57° 47' 37.59" E

Course from PT I20000X-2 to PC I20000X-3 N 71° 03' 28.91" E Dist 2,370.9512

Course from PT I20CDE1-1 to PC I20CDE1-2 N 48° 31' 46.27" E Dist 55.6159

Curve Data

Curve I20CDE1-2
P.I. Station 8102+64.63 N 798,368.6619 E 1,961,933.2080
Delta = 4° 00' 00.00" (LT)
Degree = 0° 42' 07.14"
Tangent = 285.0233
Length = 569.8151
Radius = 8,162.0000
External = 4.9751
Long Chord = 569.6994
Mid. Ord. = 4.9721
P.C. Station 8099+79.61 N 798,179.9098 E 1,961,719.6409
P.T. Station 8105+49.42 N 798,571.8520 E 1,962,133.0882
C.C. N 804,295.6720 E 1,956,314.4863
Back = N 48° 31' 46.27" E
Ahead = N 44° 31' 46.27" E
Chord Bear = N 46° 31' 46.27" E

Course from PT I20CDE1-2 to PC I20CDE1-3 N 44° 31' 46.27" E Dist 2,375.2273

Curve Data

Curve I20CDE1-3
P.I. Station 8130+74.73 N 800,372.1173 E 1,963,904.0281
Delta = 4° 37' 02.11" (RT)
Degree = 1° 32' 20.70"
Tangent = 150.0812
Length = 300.0000
Radius = 3,722.7190
External = 3.0240
Long Chord = 299.9188
Mid. Ord. = 3.0216
P.C. Station 8129+24.65 N 800,265.1260 E 1,963,798.7796
P.T. Station 8132+24.65 N 800,470.2889 E 1,964,017.5477
C.C. N 797,654.4701 E 1,966,452.6659
Back = N 44° 31' 46.27" E
Ahead = N 49° 08' 48.38" E
Chord Bear = N 46° 50' 17.33" E

Course from BSHRG001 to PC BSHRG0P-1 N 48° 31' 46.27" E Dist 722.5100

Curve Data

Curve BSHRG0P-1
P.I. Station 5114+89.74 N 799,177.7929 E 1,962,855.9385
Delta = 35° 31' 51.33" (RT)
Degree = 8° 00' 48.22"
Tangent = 229.0860
Length = 443.3941
Radius = 715.0000
External = 35.8032
Long Chord = 436.3235
Mid. Ord. = 34.0959
P.C. Station 5112+60.66 N 799,026.0844 E 1,962,684.2851
P.T. Station 5117+04.05 N 799,201.4986 E 1,963,083.7948
C.C. N 798,490.3370 E 1,963,157.7824
Back = N 48° 31' 46.27" E
Ahead = N 84° 03' 37.60" E
Chord Bear = N 66° 17' 41.93" E

Course from PT BSHRG0P-1 to PC BSHRG0P-2 N 84° 03' 37.60" E Dist 300.0000

Curve Data

Curve BSHRG0P-2
P.I. Station 5121+97.32 N 799,252.5417 E 1,963,574.4153
Delta = 57° 48' 52.60" (LT)
Degree = 16° 22' 12.80"
Tangent = 193.2686
Length = 353.1694
Radius = 350.0000
External = 49.8159
Long Chord = 338.3758
Mid. Ord. = 43.6090
P.C. Station 5120+04.05 N 799,232.5424 E 1,963,382.1842
P.T. Station 5123+57.22 N 799,425.8852 E 1,963,659.8832
C.C. N 799,580.6634 E 1,963,345.9665
Back = N 84° 03' 37.60" E
Ahead = N 26° 14' 44.99" E
Chord Bear = N 55° 09' 11.29" E

Course from PT BSHRG0P-2 to BSHRG002 N 26° 14' 44.99" E Dist 170.8143

Point BSHRG002 N 799,579.0894 E 1,963,735.4213 Sta 5125+28.04

Ending chain BSHRG0P description